NO REPRESENTATION OR WARRANTY, EXPRESSED OR IMPLIED, IS MADE AS TO THE ACCURACY, COMPLETENESS OR USEFULNESS OF THE INFORMATION OR STATEMENTS CONTAINED IN THESE DRAWINGS, OR THAT THE DISCLOSURE OF ANY INFORMATION, APPARATUS, METHOD OR PROCESS DISCLOSED IN THESE DRAWINGS MAY NOT INFRINGE PRIVATE RIGHTS OF OTHERS. NO LIABILITY IS ASSUMED WITH RESPECT TO THE USE OF, OR FOR DAMAGES RESULTING FROM THE USE OF, ANY INFORMATION, APPARATUS, METHOD OR PROCESS DISCLOSED IN THESE DRAWINGS. DRAWINGS MADE AVAILABLE FOR INFORMATION TO BIDDER ARE NOT TO BE USED FOR OTHER PURPOSES AND ARE TO BE RETURNED UPON REQUEST OF THE FORWARDING CONTRACTOR.

REVISIONS

REV	TYPE	DESCRIPTION OF CHANGE	DES	DET	CK	ENG	TL	GL	CE	VER	DATE
0		ORIGINAL ISSUE									

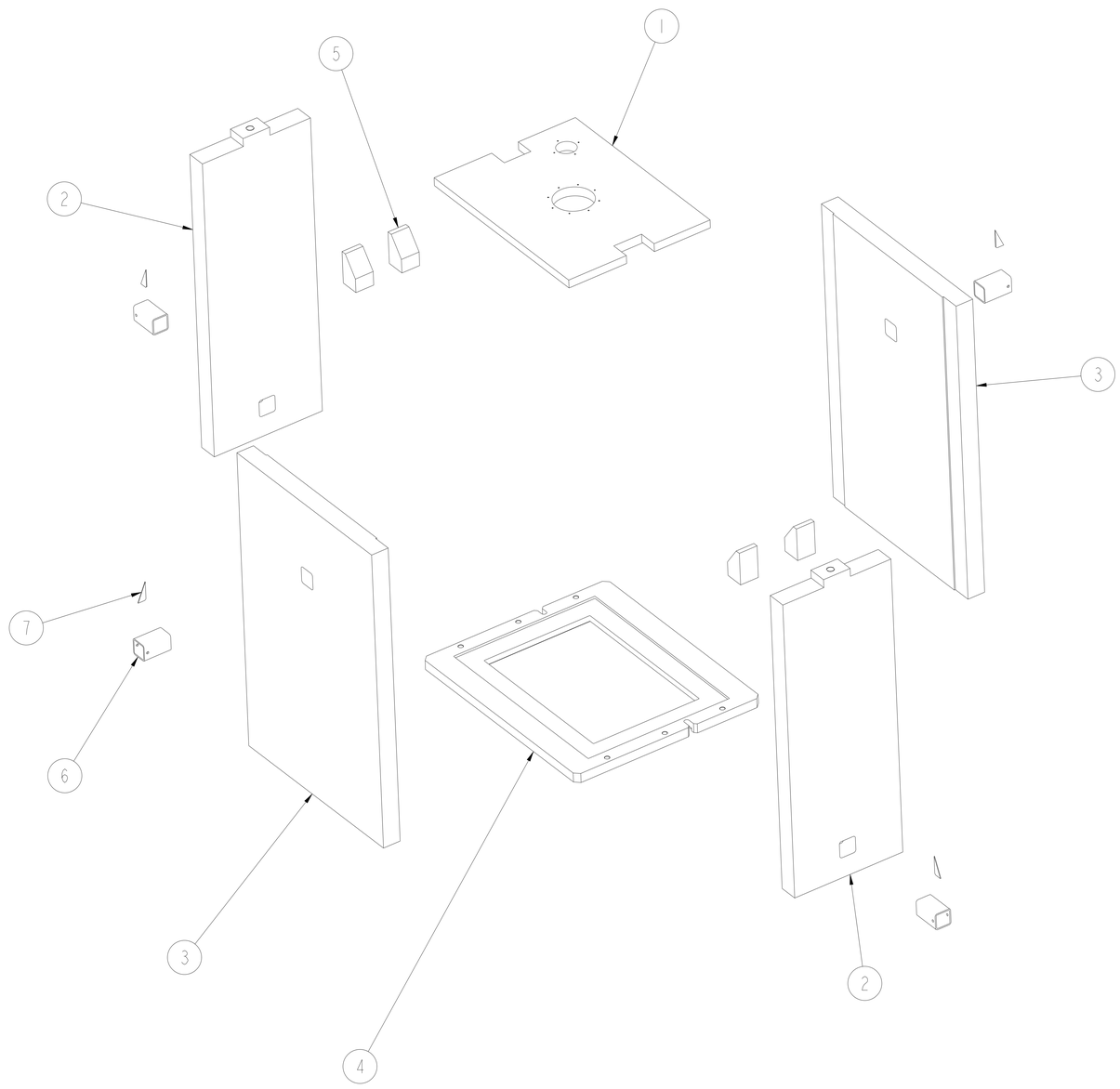

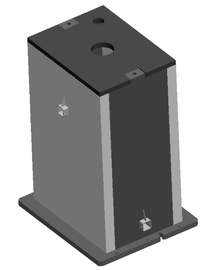

REFERENCE VIEW
SCALE 0.050

NOTES:

1. ADDITIONAL REQUIREMENTS DEFINED IN 106090204-EQ0001
2. MADE FOR RID BEAM STOP SHIELDING 106090204-M8E-8510-A002

FIND NO.	QTY	PART OR IDENTIFYING NUMBER	DESCRIPTION OR NOMENCLATURE	MATERIAL / SPECIFICATION
7	4	106090204-M8U-8510-A054	SUPPORT PIN SHELL GUSSET	STEEL ASTM A36
6	4	106090204-M8U-8510-A053	SUPPORT PIN SHELL	STEEL A500 GRADE B
5	4	106090204-M8U-8510-A052	SUPPORT, LIFTING, PLUG	STEEL ASTM A36
4	1	106090204-M8U-8510-A051-4	PLATE, 54.12 X 43.0 X 2.0	STEEL ASTM A36
3	2	106090204-M8U-8510-A051-3	PLATE, 60.0 X 45.0 X 4.0	STEEL ASTM A36
2	2	106090204-M8U-8510-A051-2	PLATE, 60.0 X 25.5 X 4.0	STEEL ASTM A36
1	1	106090204-M8U-8510-A051-1	PLATE, 45.0 X 33.0 X 2.0	STEEL ASTM A36

PARTS LIST

TOTAL WEIGHT 11249 LBS

QUALITY VERIFICATION	
DOCUMENTS REQUIRED	APPLICABLE
MATERIAL MILL TEST REPORT	X
LEAK TEST REPORT	
CLEANING CERT	
WELD / BRAZE INSPECTION REPORT	X
HEAT TREAT REPORT (W/CHART)	
DIMENSIONAL REPORT	X
MATERIAL SELLER CERT	X
FUNCTIONAL TEST REPORT	
DEVIATION REQUEST	X
NONCONFORMANCE REPORT	X
106090204-M8U-8510-A049	QA REP / DATE
NEXT USED ASSEMBLIES	

DIMENSIONS ARE IN INCHES
DRAFTING STANDARD: ASME Y14.100
DIMENSIONING AND TOLERANCING IN ACCORDANCE WITH ASME Y14.5M,1994
DO NOT SCALE DRAWING

DEFAULT TOLERANCES

LINEAR	ANGULAR
X.XX ±0.03	±0.5°
X.XXX ±0.005	

REMOVE ALL BURRS AND BREAK SHARP EDGES: .03
SURFACE ROUGHNESS: 125 RMS MAX
THIRD ANGLE PROJECTION

APPROVALS

		DATE
DESIGNER	M.C. HOFFMANN	04/2011
DETAILER	S.E. HAMBLEN	04/2011
CHECKER		2011.10.25 15:08:30 -04'00'
ENGINEER		2011.09.26 12:10:02 -04'00'
TEAM LEAD	Michael Dayton 2011.11.01 13:08:31 -04'00'	
GROUP LEAD		
CHIEF ENGR		
VERIFIER		
CONTROL SYSTEM	4	RELEASE
SNS PROCEDURE	NFDD-ENG-001	

THIS DRAWING IS THE PROPERTY OF
OAK RIDGE NATIONAL LABORATORY
DEPARTMENT OF ENERGY UNDER U.S. GOVERNMENT CONTRACT DE-AC05-00OR22725
OAK RIDGE, TENNESSEE
NEUTRON SCIENCES

TARGET SYSTEMS TEMPORARY CONTAINER BEAM STOP SHIELD 1 TOP WELDMENT

SIZE	DRAWING NUMBER	REV
E	106090204-M8U-8510-A051	0

SCALE	CAD MODEL	MODEL REV	SHEET
0.100	106090204-M8U-8510-A051	0	1 of 6

THIS DRAWING PREPARED ON Pro/ENGINEER

DWG NO. 106090204-M8U-8510-A051 1st

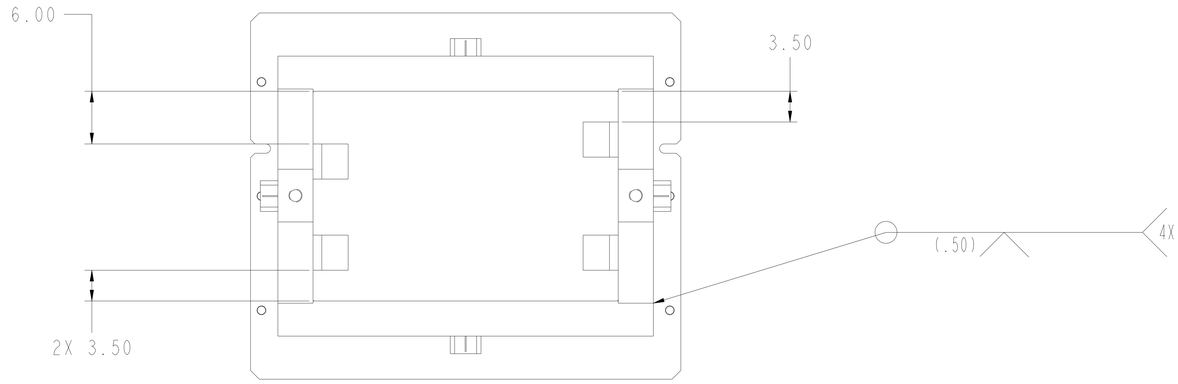

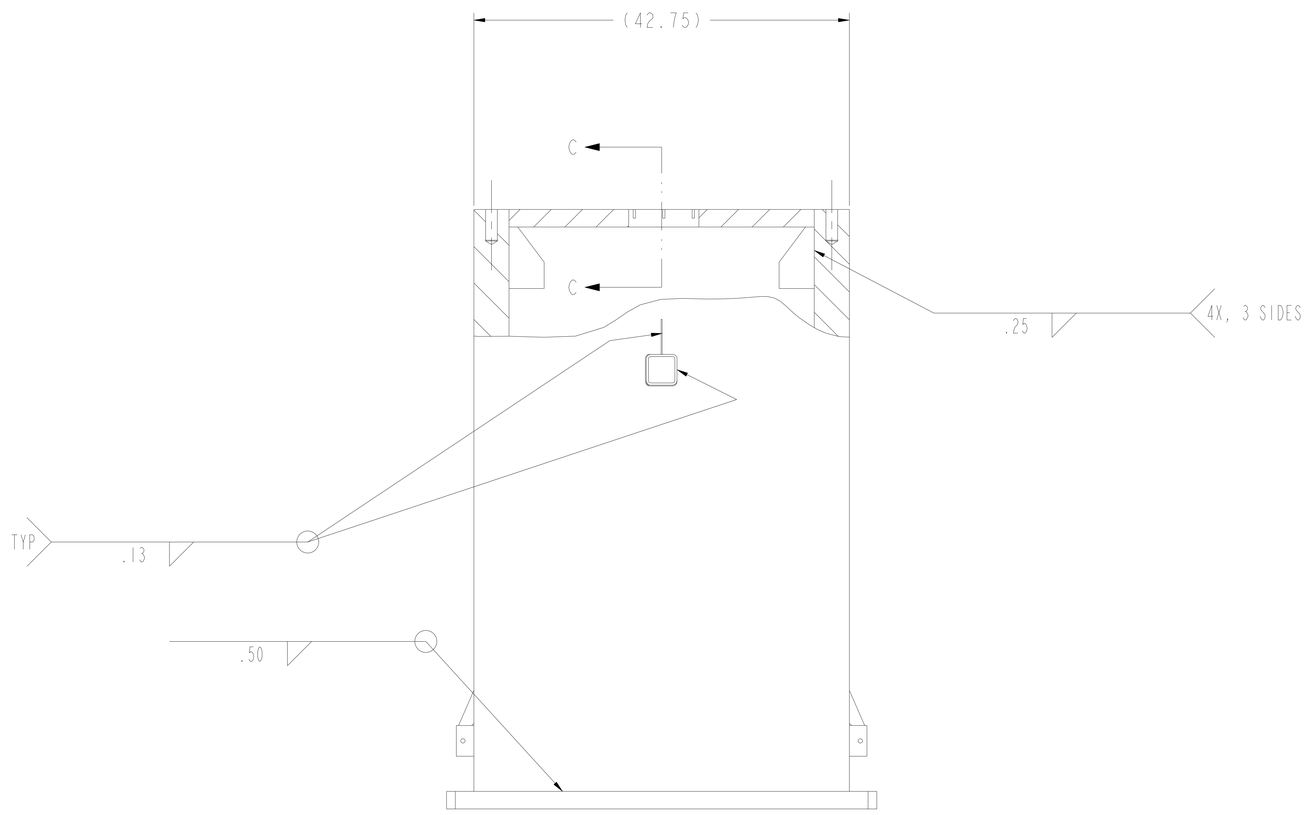

SECTION A-A

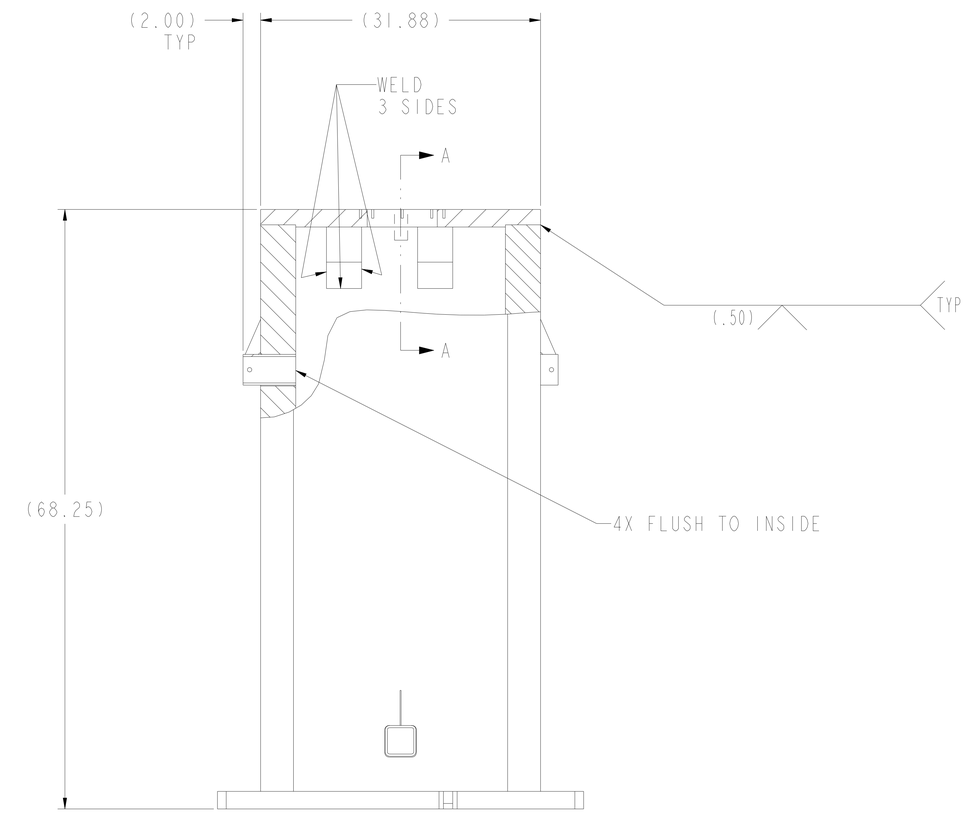

SECTION C-C

SIZE	DRAWING NUMBER	REV
E	106090204-M8U-8510-A051	0

SCALE	CAD MODEL	MODEL REV	SHEET
0.150	106090204-M8U-8510-A051	0	2 of 6

THIS DRAWING PREPARED ON Pro/ENGINEER

DWG NO. 106090204-M8U-8510-A051 | SH 2

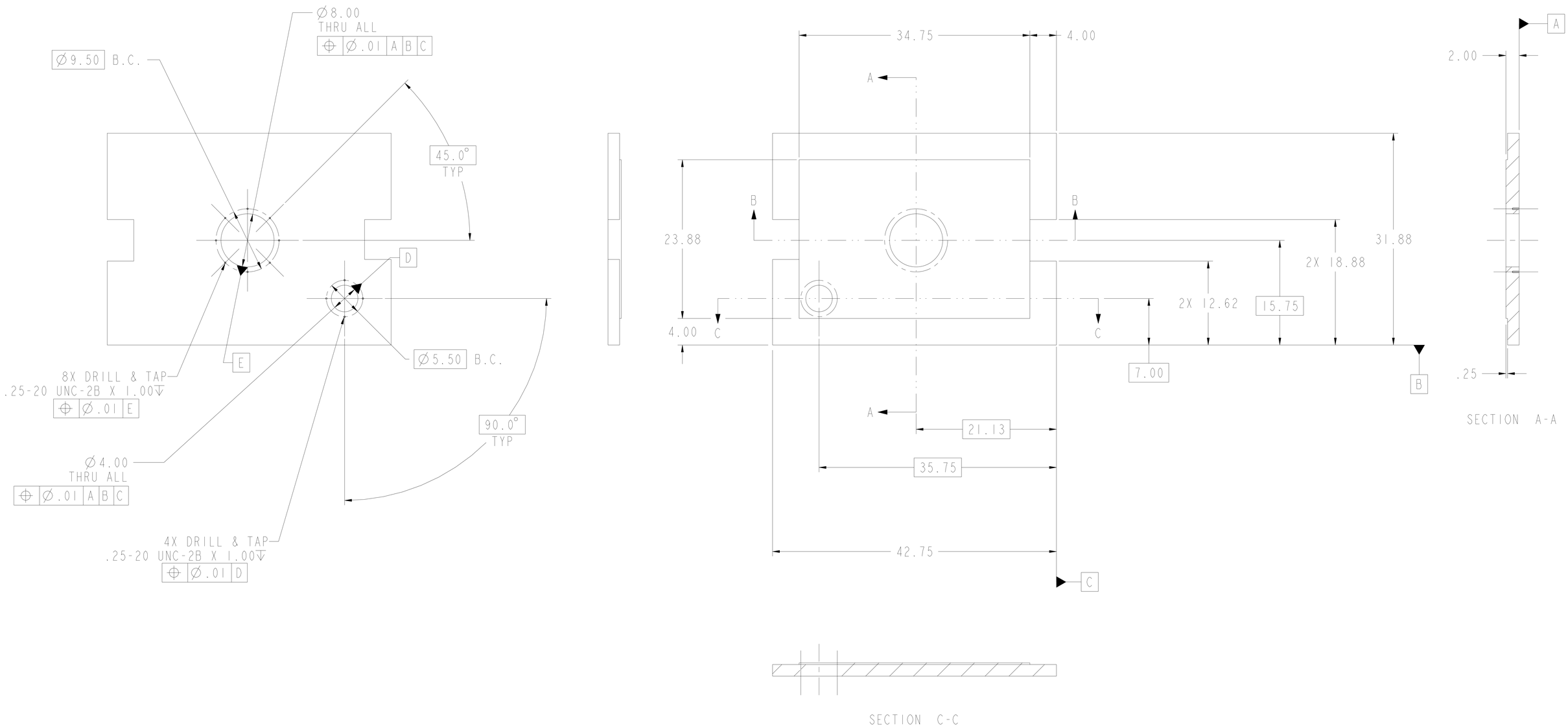

106090204-M8U-8510-A051-1

SIZE	DRAWING NUMBER	REV
E	106090204-M8U-8510-A051	0

SCALE	CAD MODEL	MODEL REV	SHEET
0.175	106090204-M8U-8510-A051-1	0	3 of 6

THIS DRAWING PREPARED ON Pro/ENGINEER

DWG NO. 106090204-M8U-8510-A051 1^3

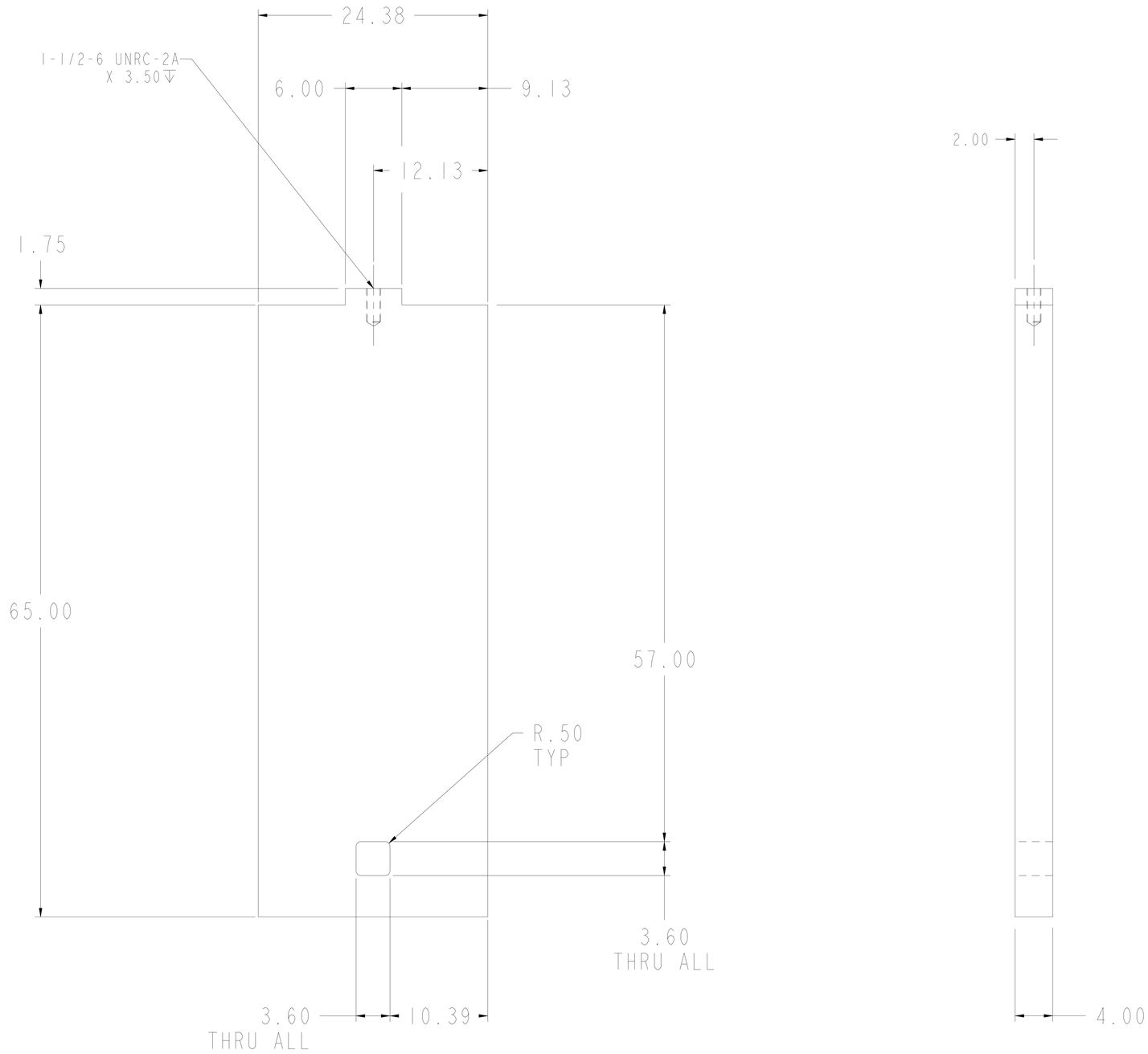

106090204-M8U-8510-A051-2

SIZE	DRAWING NUMBER	REV
E	106090204-M8U-8510-A051	0

SCALE	CAD MODEL	MODEL REV	SHEET
0.200	106090204-M8U-8510-A051-2	-	4 of 6

THIS DRAWING PREPARED ON Pro/ENGINEER

DWG NO: 106090204-M8U-8510-A051 SH 4

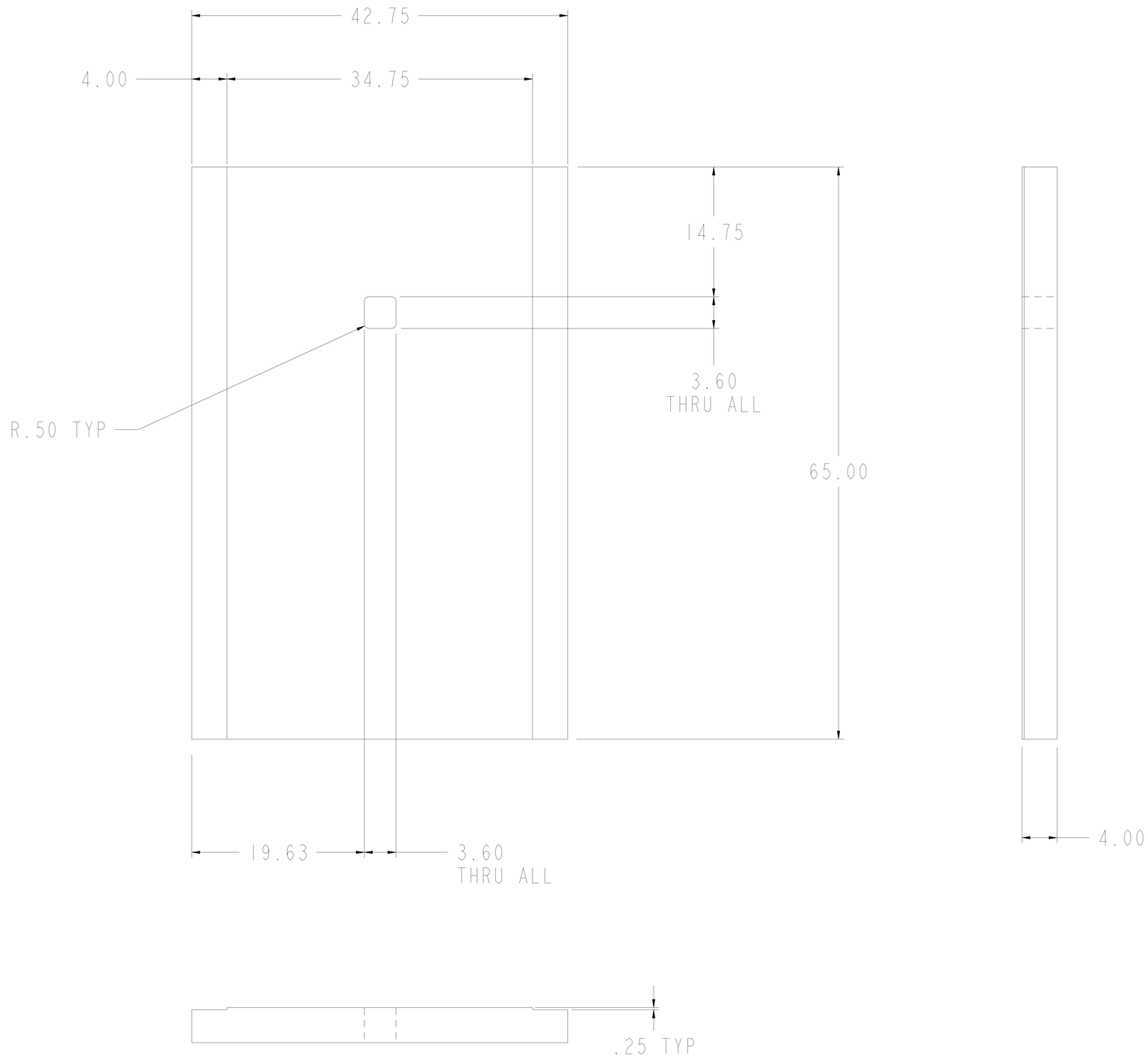

106090204-M8U-8510-A051-3

SIZE	DRAWING NUMBER	REV
E	106090204-M8U-8510-A051	0

SCALE	CAD MODEL	MODEL REV	SHEET
0.200	106090204-M8U-8510-A051-3	-	5 of 6

THIS DRAWING PREPARED ON Pro/ENGINEER

DWG NO: 106090204-M8U-8510-A051 SH 5

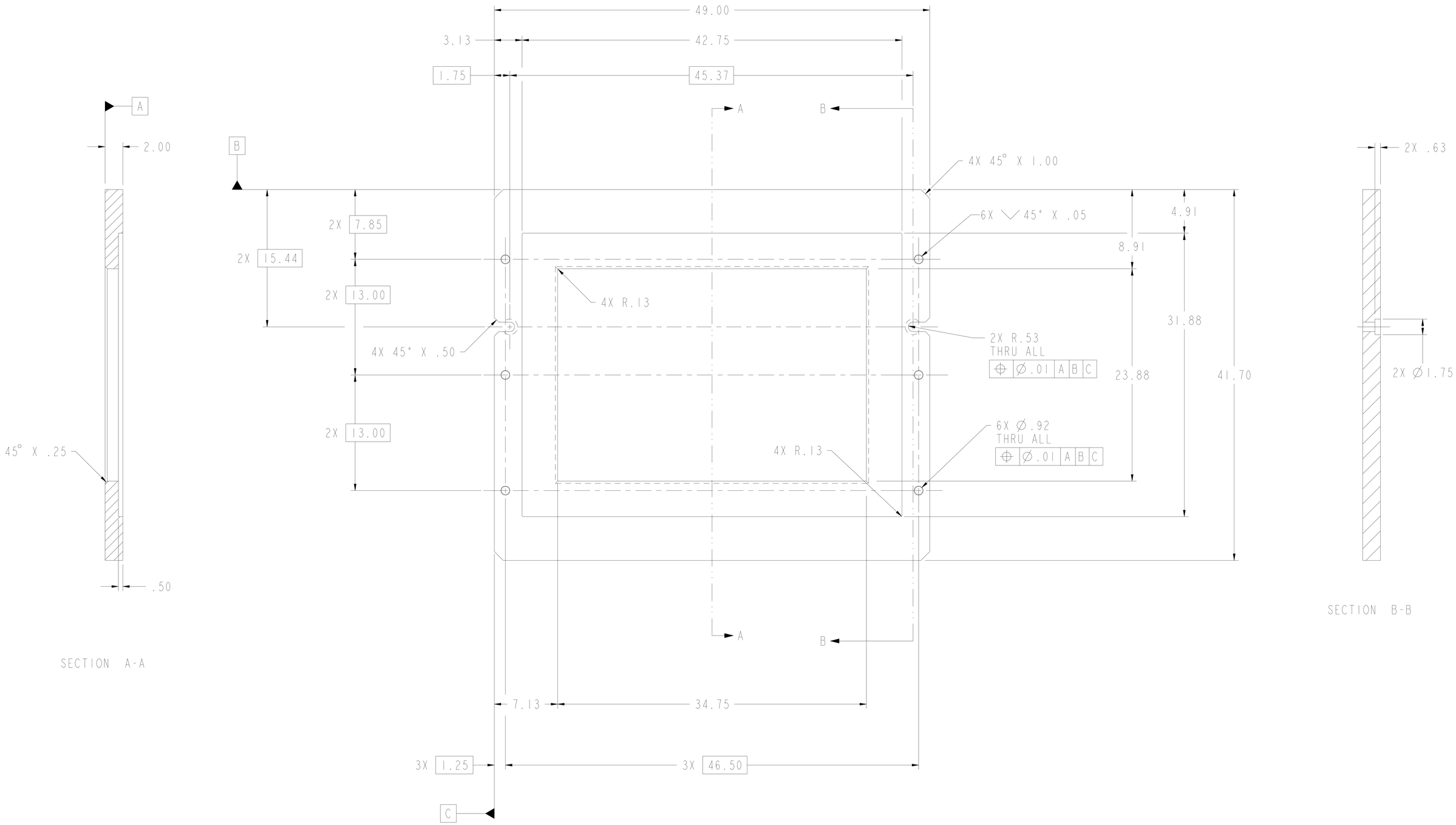

106090204-M8U-8510-A051-4

SIZE	DRAWING NUMBER	REV
E	106090204-M8U-8510-A051	0

SCALE	CAD MODEL	MODEL REV	SHEET
0.250	106090204-M8U-8510-A051-4	0	6 of 6

THIS DRAWING PREPARED ON Pro/ENGINEER

DWG NO. 106090204-M8U-8510-A051 SH 6