NO REPRESENTATION OR WARRANTY, EXPRESSED OR IMPLIED, IS MADE AS TO THE ACCURACY, COMPLETENESS OR USEFULNESS OF THE INFORMATION OR STATEMENTS CONTAINED IN THESE DRAWINGS, OR THAT THE DISCLOSURE OF ANY INFORMATION, APPARATUS, METHOD OR PROCESS DISCLOSED IN THESE DRAWINGS MAY NOT INFRINGE PRIVATE RIGHTS OF OTHERS. NO LIABILITY IS ASSUMED WITH RESPECT TO THE USE OF, OR FOR DAMAGES RESULTING FROM THE USE OF, ANY INFORMATION, APPARATUS, METHOD OR PROCESS DISCLOSED IN THESE DRAWINGS. DRAWINGS MADE AVAILABLE FOR INFORMATION TO BIDDER ARE NOT TO BE USED FOR OTHER PURPOSES AND ARE TO BE RETURNED UPON REQUEST OF THE FORWARDING CONTRACTOR.

REVISIONS

REV	TYPE	DESCRIPTION OF CHANGE	DES	DET	CK	ENG	TL	GL	CE	VER	DATE
0		ORIGINAL ISSUE									

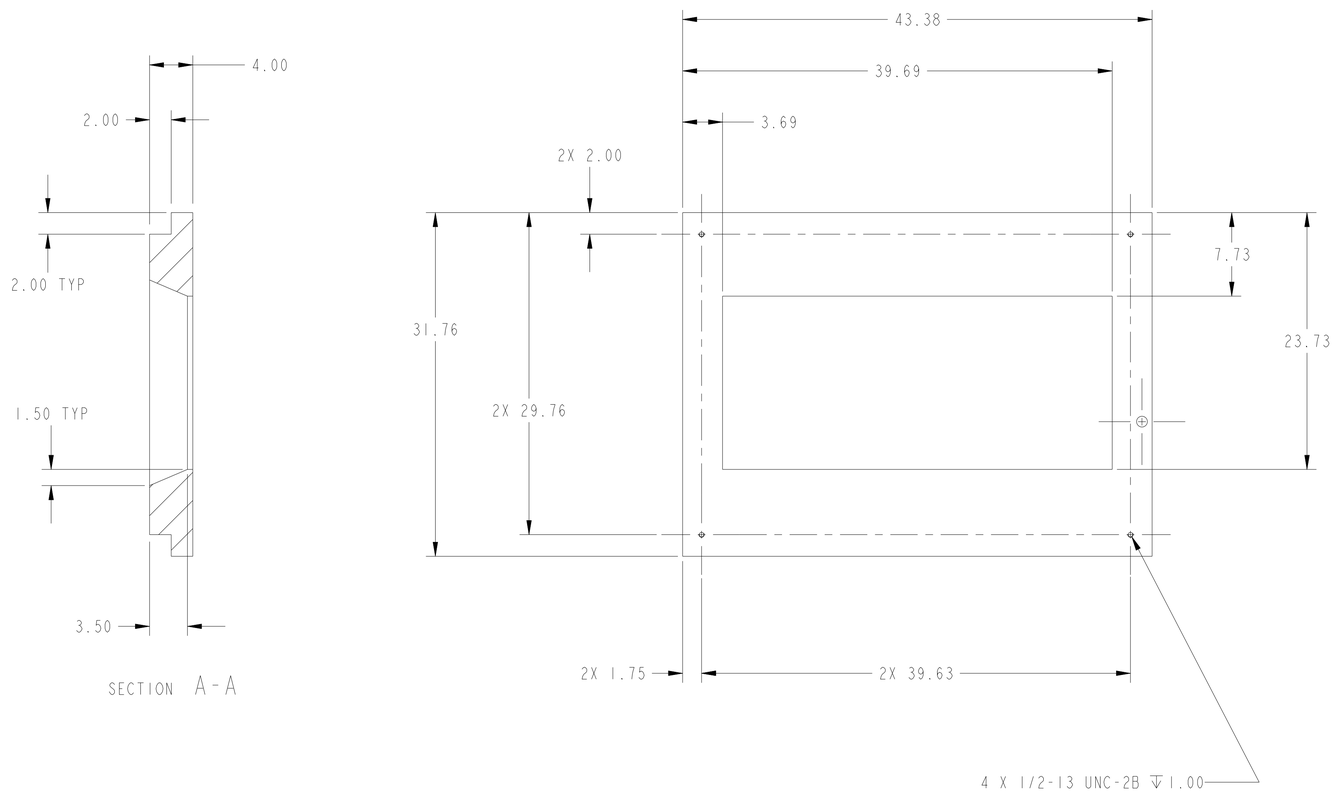

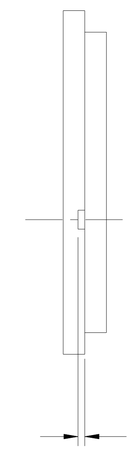

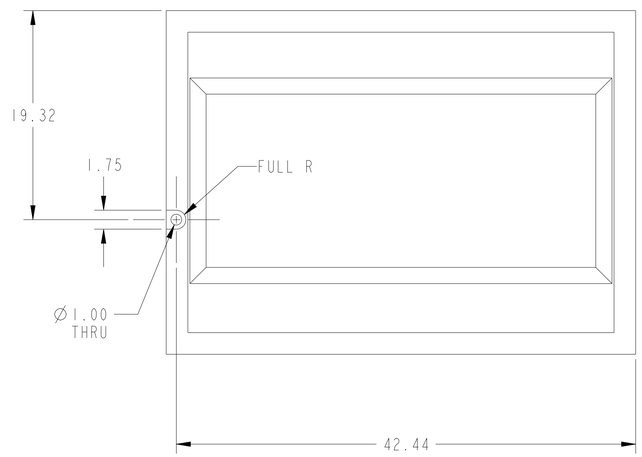

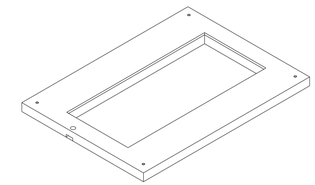

REFERENCE VIEW
SCALE 0.072

NOTE:
1. ADDITIONAL REQUIREMENTS DEFINED IN 106090204-EQ0001

MATERIAL	SPECIFICATION	WEIGHT
STEEL	ASTM A36	665 LBS

PART INFORMATION

QUALITY VERIFICATION

DOCUMENTS REQUIRED	APPLICABLE
MATERIAL MILL TEST REPORT	
LEAK TEST REPORT	
CLEANING CERT	
WELD / BRAZE INSPECTION REPORT	
HEAT TREAT REPORT (W/CHART)	
DIMENSIONAL REPORT	
MATERIAL SELLER CERT	
FUNCTIONAL TEST REPORT	
DEVIATION REQUEST	X
NONCONFORMANCE REPORT	X
QA REP	DATE

106090204-M8U-8510-A085
NEXT USED ASSEMBLIES

DIMENSIONS ARE IN INCHES
DRAFTING STANDARD: ASME Y14.100
DIMENSIONING AND TOLERANCING IN ACCORDANCE WITH ASME Y14.5M,1994
DO NOT SCALE DRAWING

DEFAULT TOLERANCES

LINEAR	ANGULAR
X.XX ±0.01 X.XXX ±0.005	±0.5°

REMOVE ALL BURRS AND BREAK SHARP EDGES: 0.03
SURFACE ROUGHNESS: 125 RMS MAX
THIRD ANGLE PROJECTION

APPROVALS

DESIGNER	M.C. HOFFMANN	DATE 07/2011
DETAILER	S.E. HAMBLEN	DATE 07/2011
CHECKER		DATE 2011.10.26 10:39:45 -04'00'
ENGINEER		DATE 2011.10.18 16:51:38 -04'00'
TEAM LEAD	Michael Dayton	DATE 2011.11.01 13:32:38 -04'00'
GROUP LEAD		DATE
CHIEF ENGR		DATE
VERIFIER		DATE
CONTROL SYSTEM	4	RELEASE
SNS PROCEDURE	NFDD-ENG-001	

THIS DRAWING IS THE PROPERTY OF
OAK RIDGE NATIONAL LABORATORY
DEPARTMENT OF ENERGY UNDER U.S. GOVERNMENT CONTRACT DE-AC05-00OR22725
OAK RIDGE, TENNESSEE

NEUTRON SCIENCES

TARGET SYSTEMS TEMPORARY CONTAINER BEAM STOP INERT

SIZE	DRAWING NUMBER	REV
D	106090204-M8U-8510-A089	0

SCALE	CAD MODEL	MODEL REV	SHEET
0.143	106090204-M8U-8510-A089	0	1 of 1

THIS DRAWING PREPARED ON Pro/ENGINEER

DWG NO. 106090204-M8U-8510-A089 SH 1