NO REPRESENTATION OR WARRANTY, EXPRESSED OR IMPLIED, IS MADE AS TO THE ACCURACY, COMPLETENESS OR USEFULNESS OF THE INFORMATION OR STATEMENTS CONTAINED IN THESE DRAWINGS, OR THAT THE DISCLOSURE OF ANY INFORMATION, APPARATUS, METHOD OR PROCESS DISCLOSED IN THESE DRAWINGS MAY NOT INFRINGE PRIVATE RIGHTS OF OTHERS. NO LIABILITY IS ASSUMED WITH RESPECT TO THE USE OF, OR FOR DAMAGES RESULTING FROM THE USE OF, ANY INFORMATION, APPARATUS, METHOD OR PROCESS DISCLOSED IN THESE DRAWINGS. DRAWINGS MADE AVAILABLE FOR INFORMATION TO BIDDER ARE NOT TO BE USED FOR OTHER PURPOSES AND ARE TO BE RETURNED UPON REQUEST OF THE FORWARDING CONTRACTOR.

REVISIONS

REV	TYPE	DESCRIPTION OF CHANGE	DES	DET	CK	ENG	TL	GL	CE	VER	DATE
0		ORIGINAL ISSUE									

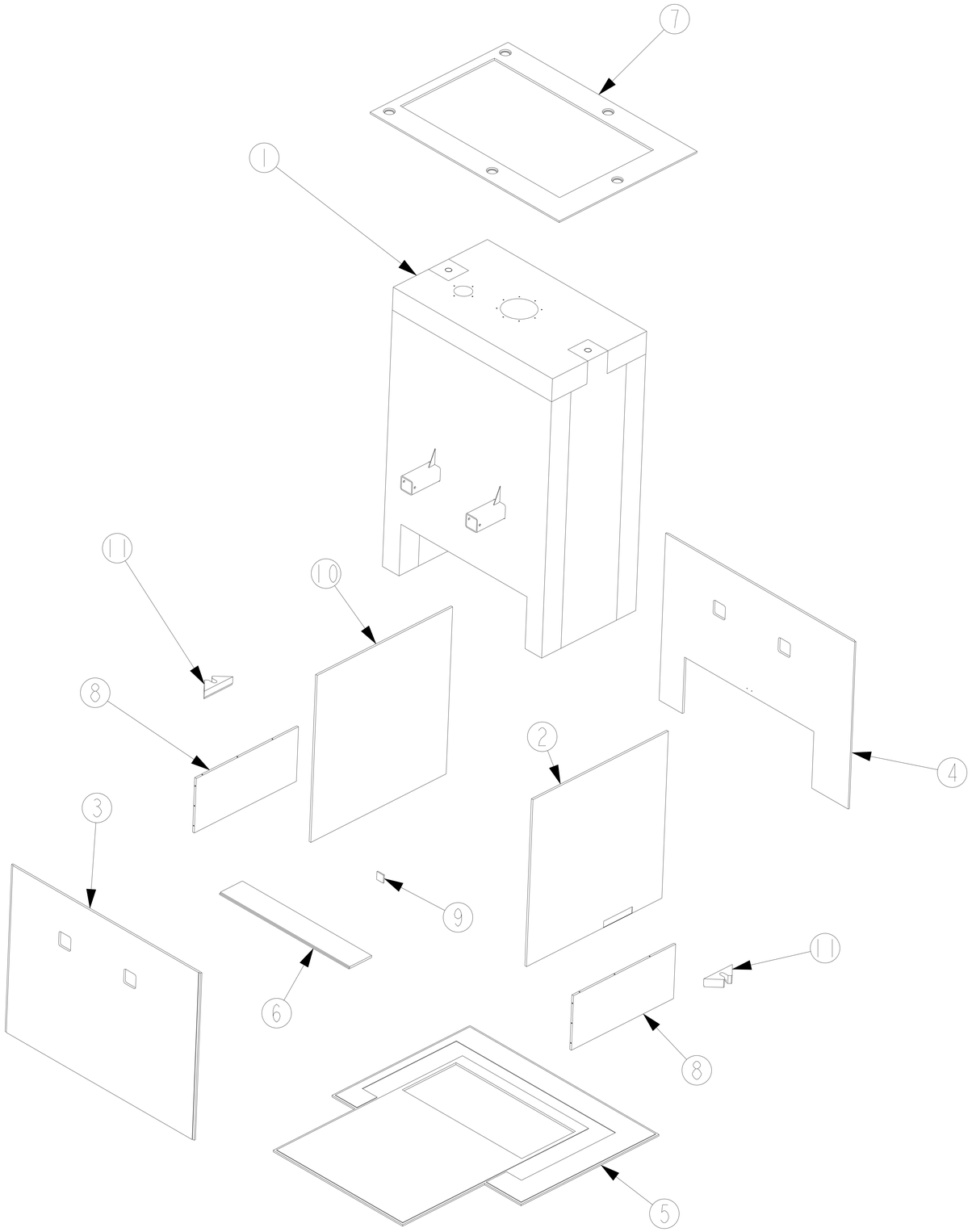

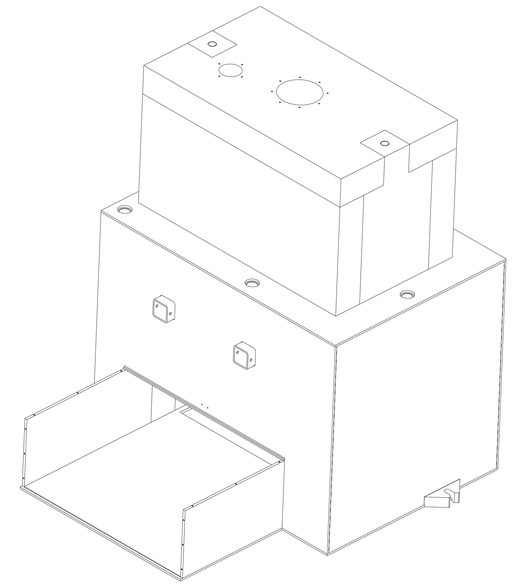

REFERENCE VIEW
SCALE 0.100

FIND NO.	QTY	PART OR IDENTIFYING NUMBER	DESCRIPTION OR NOMENCLATURE	MATERIAL / SPECIFICATION
11	2	106090204-M8U-8510-A070	LOCATING MOUNT	STEEL ASTM A36
10	1	106090204-M8U-8510-A062-9	PLATE, (42.0 X 40.25 X .5)	STEEL ASTM A36
9	1	106090204-M8U-8510-A062-8	THREADED HOLE BLOCK	STEEL ASTM A36
8	2	106090204-M8U-8510-A062-7	PLATE, (30.38 X 12.9 X .5)	STEEL ASTM A36
7	1	106090204-M8U-8510-A062-6	PLATE, (57.0 X 41.0 X .5)	STEEL ASTM A36
6	1	106090204-M8U-8510-A062-5	PLATE, (39.2 X 6.5 X .5)	STEEL ASTM A36
5	1	106090204-M8U-8510-A062-4	PLATE, (63.38 X 57.0 X .5)	STEEL ASTM A36
4	1	106090204-M8U-8510-A062-3	PLATE, (57.0 X 42.0 X .5)	STEEL ASTM A36
3	1	106090204-M8U-8510-A062-2	PLATE, (57.0 X 42.0 X .5)	STEEL ASTM A36
2	1	106090204-M8U-8510-A062-1	PLATE, (42.0 X 40.25 X .5)	STEEL ASTM A36
1	1	106090204-M8U-8510-A061	BEAM STOP, INNER STEEL WELDMENT	

PARTS LIST — TOTAL WEIGHT 16682 LBS

NOTE:
1. ADDITIONAL REQUIREMENTS DEFINED IN 106090204-EQ0001

QUALITY VERIFICATION	
DOCUMENTS REQUIRED	APPLICABLE
MATERIAL MILL TEST REPORT	
LEAK TEST REPORT	
CLEANING CERT	
WELD / BRAZE INSPECTION REPORT	X
HEAT TREAT REPORT (W/CHART)	
DIMENSIONAL REPORT	X
MATERIAL SELLER CERT	
FUNCTIONAL TEST REPORT	
DEVIATION REQUEST	X
NONCONFORMANCE REPORT	X
106090204-M8U-8510-A062	QA REP / DATE
NEXT USED ASSEMBLIES	

DIMENSIONS ARE IN INCHES
DRAFTING STANDARD: ASME Y14.100
DIMENSIONING AND TOLERANCING IN ACCORDANCE WITH ASME Y14.5M,1994
DO NOT SCALE DRAWING

DEFAULT TOLERANCES

LINEAR	ANGULAR
X.XX ±0.01	±0.5°
X.XXX ±0.005	

REMOVE ALL BURRS AND BREAK SHARP EDGES: 0.03
SURFACE ROUGHNESS: 125 RMS MAX
THIRD ANGLE PROJECTION

APPROVALS

		DATE
DESIGNER	S.E. HAMBLEN	04/2011
DRAFTER	S.E. HAMBLEN	04/2011
CHECKER		2011.10.26 09:00:02 -04'00'
ENGINEER		2011.10.18 13:12:43 -04'00'
TEAM LEAD	Michael Dayton	2011.11.01 13:20:21 -04'00'
GROUP LEAD		
CHIEF ENGR		
VERIFIER		
CONTROL SYSTEM	4	RELEASE
SNS PROCEDURE	NFDD-ENG-001	

THIS DRAWING IS THE PROPERTY OF
ornl OAK RIDGE NATIONAL LABORATORY
DEPARTMENT OF ENERGY UNDER U.S. GOVERNMENT CONTRACT DE-AC05-00OR22725
OAK RIDGE, TENNESSEE
NEUTRON SCIENCES

TARGET SYSTEMS TEMPORARY CONTAINER BEAM STOP, STEEL WELDMENT

SIZE	DRAWING NUMBER	REV
E	106090204-M8U-8510-A062	0

SCALE	CAD MODEL	MODEL REV	SHEET
0.100	106090204-M8U-8510-A062	0	1 of 11

THIS DRAWING PREPARED ON Pro/ENGINEER

DWG NO. 106090204-M8U-8510-A062 | 1 of 11

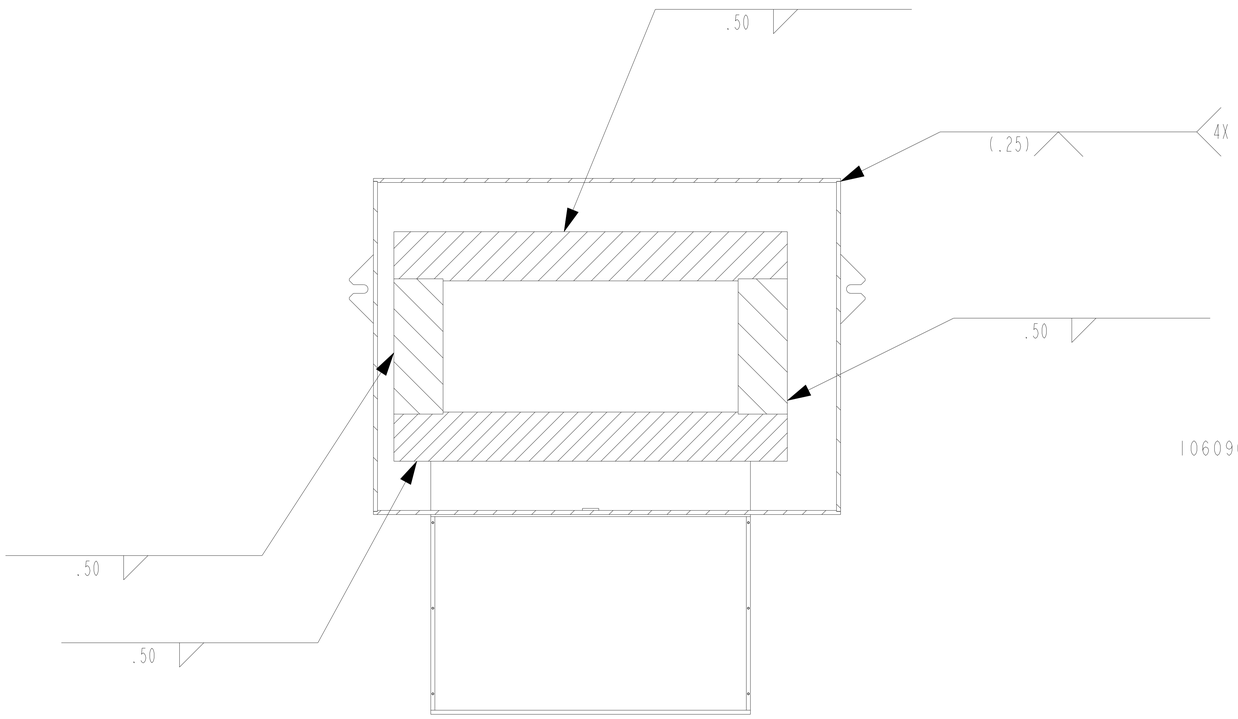

SECTION B-B

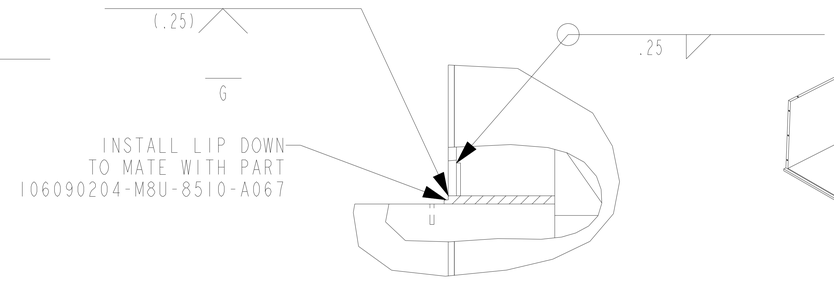

DETAIL A
SCALE 0.280

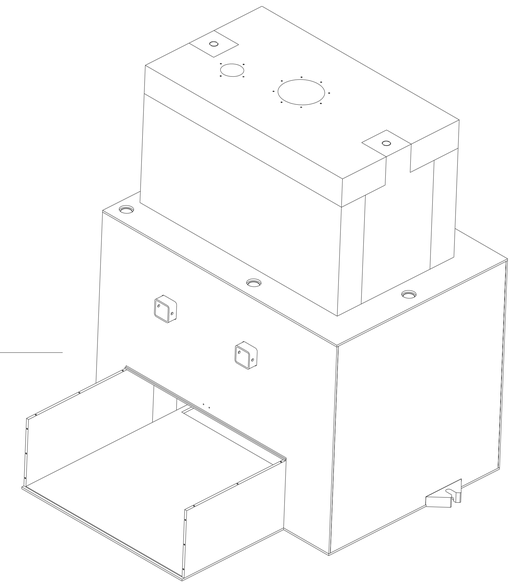

REFERENCE VIEW
SCALE 0.100

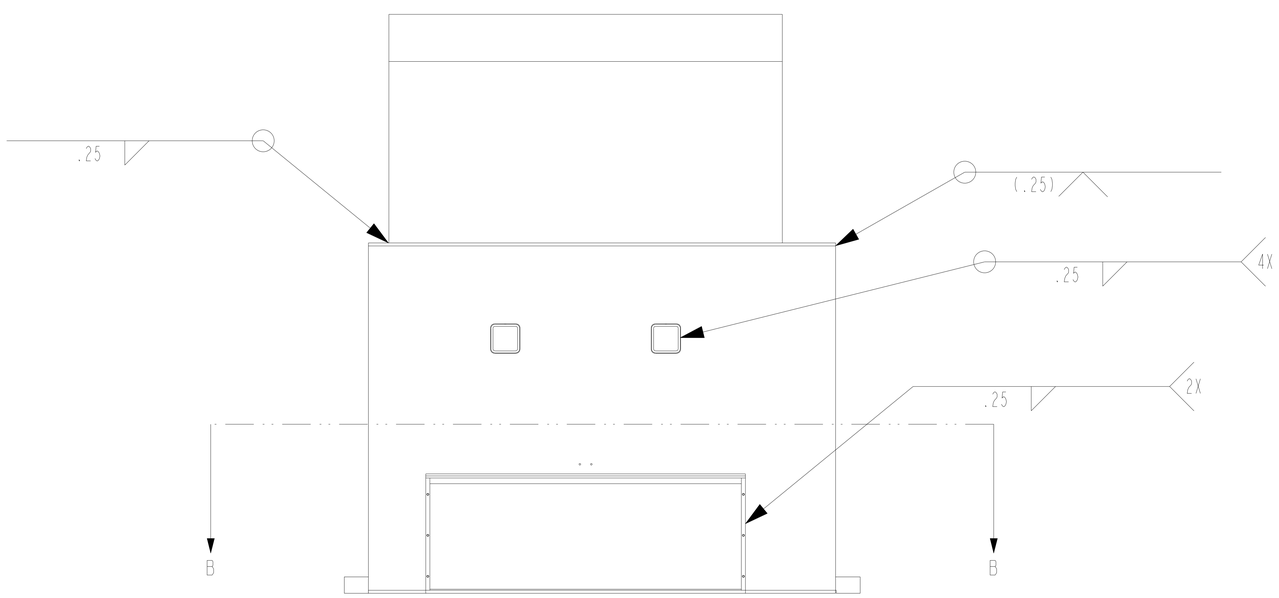

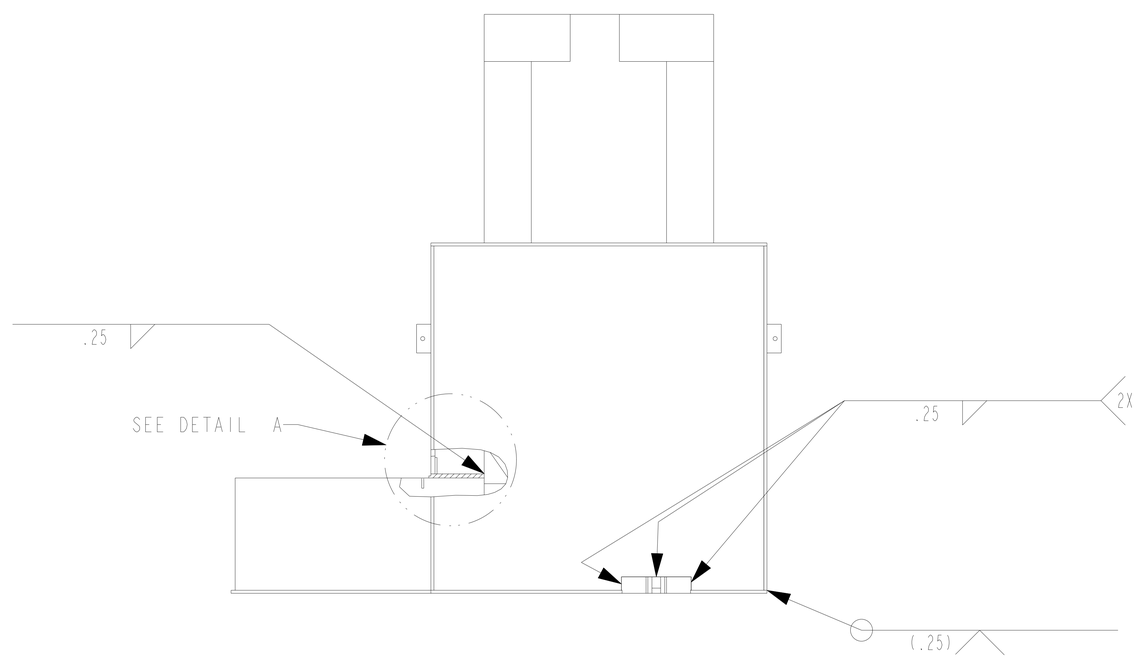

SIZE	DRAWING NUMBER		REV
E	106090204-M8U-8510-A062		0
SCALE 0.140	CAD MODEL 106090204-M8U-8510-A062	MODEL REV -	SHEET 2 of 11

THIS DRAWING PREPARED ON Pro/ENGINEER

DWG NO. 106090204-M8U-8510-A062 SH 2

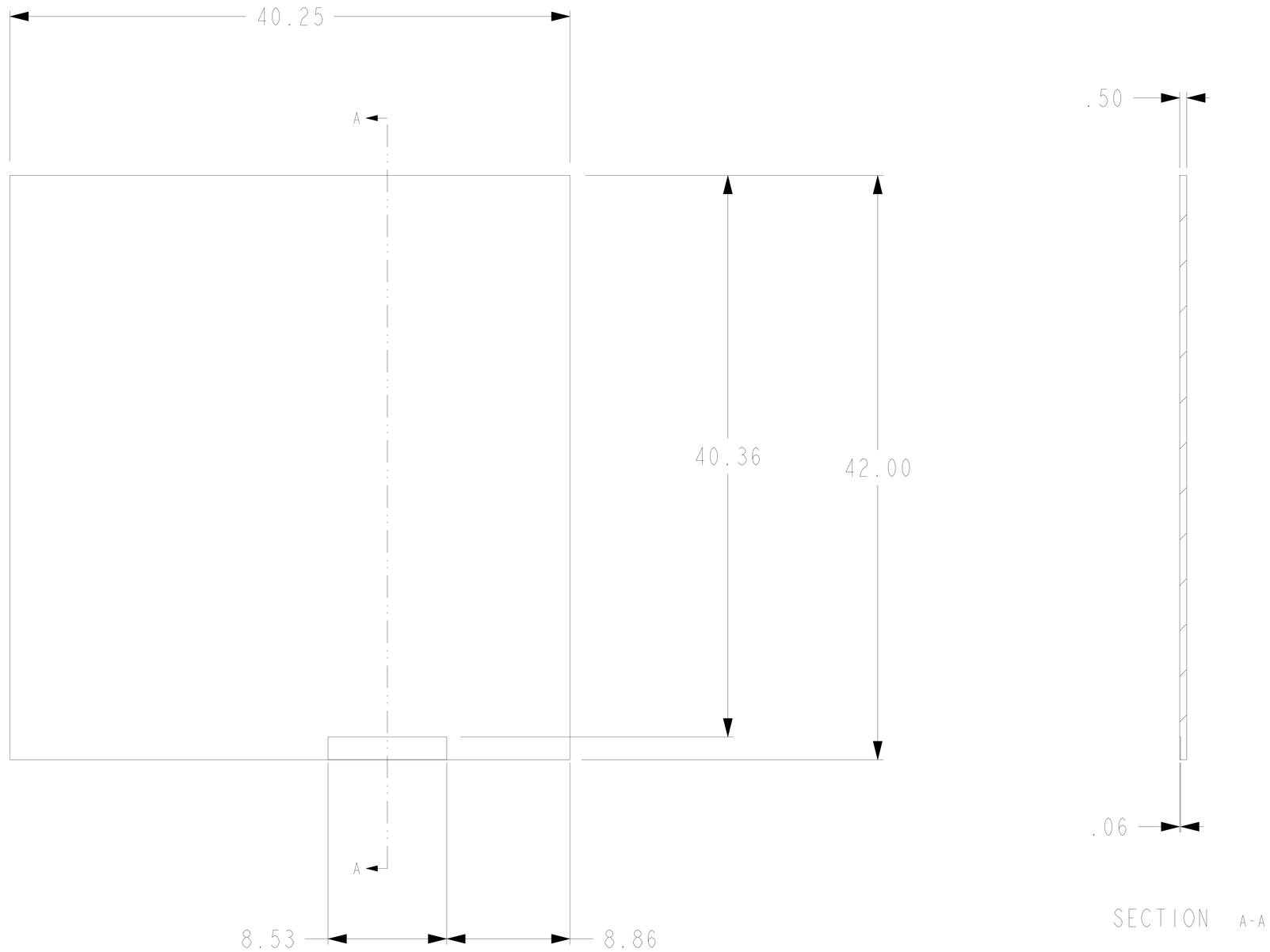

106090204-M8U-8510-A062-1

SIZE	DRAWING NUMBER	REV
E	106090204-M8U-8510-A062	0

SCALE	CAD MODEL	MODEL REV	SHEET
0.300	106090204-M8U-8510-A062-1	0	3 of 11

THIS DRAWING PREPARED ON Pro/ENGINEER

DWG NO: 106090204-M8U-8510-A062 1* 3

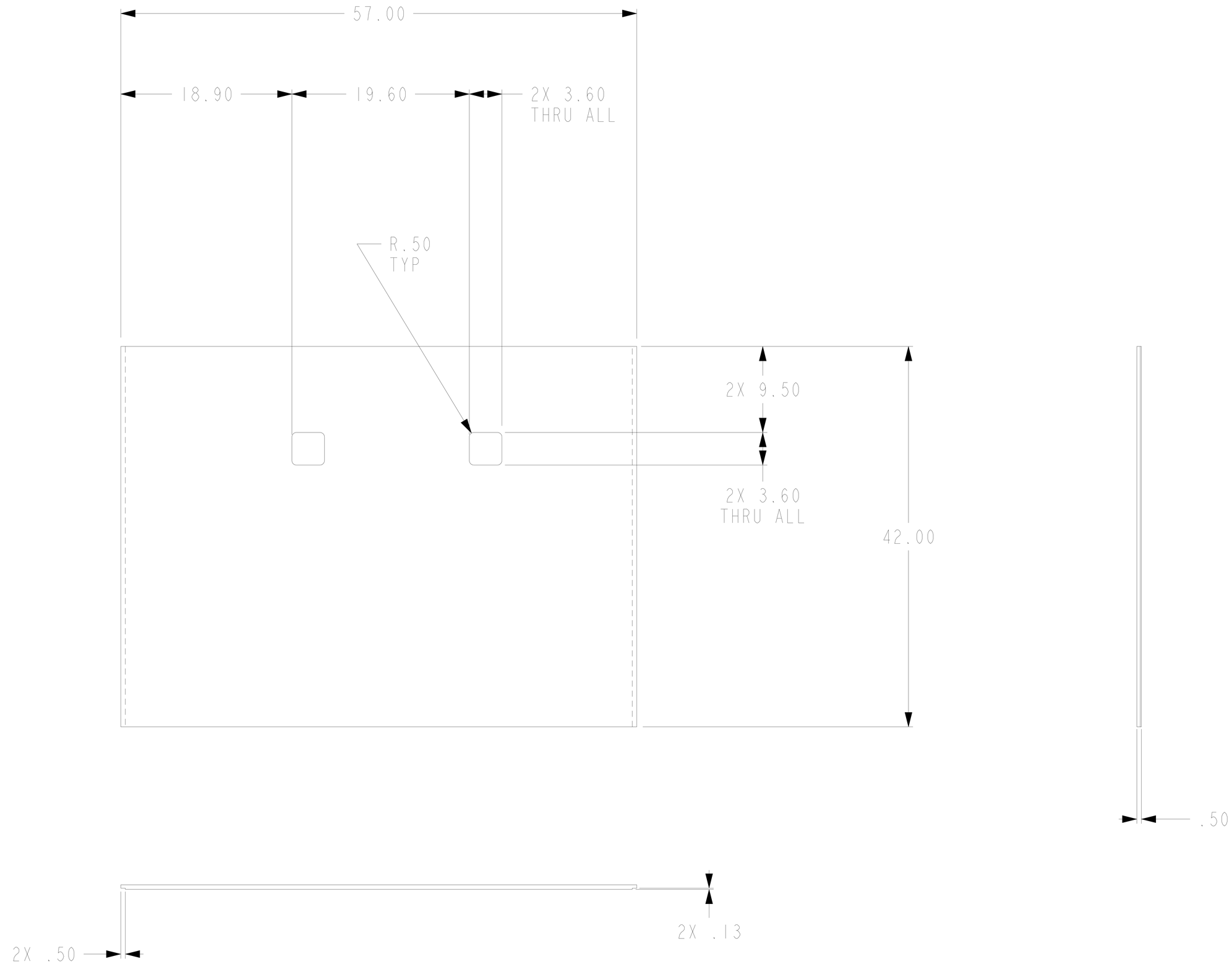

106090204-M8U-8510-A062-2

SIZE	DRAWING NUMBER	REV
E	106090204-M8U-8510-A062	0

SCALE	CAD MODEL	MODEL REV	SHEET
0.250	106090204-M8U-8510-A062-2	0	4 of 11

THIS DRAWING PREPARED ON Pro/ENGINEER

DWG NO. 106090204-M8U-8510-A062 | SH 4

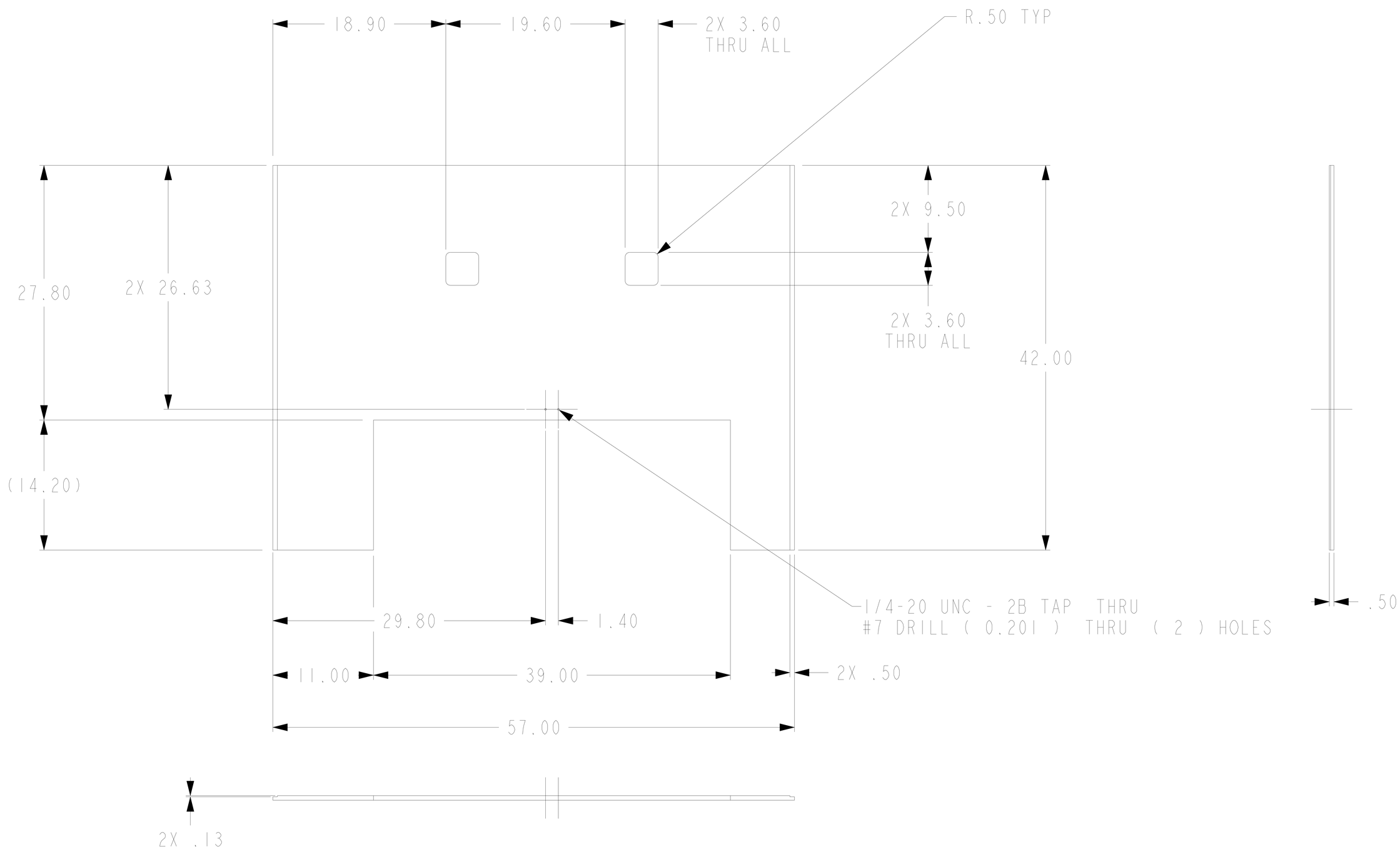

106090204-M8U-8510-A062-3

SIZE	DRAWING NUMBER	REV
E	106090204-M8U-8510-A062	0

SCALE	CAD MODEL	MODEL REV	SHEET
0.250	106090204-M8U-8510-A062-3	0	5 of 11

THIS DRAWING PREPARED ON Pro/ENGINEER

DWG NO. 106090204-M8U-8510-A062 | 5

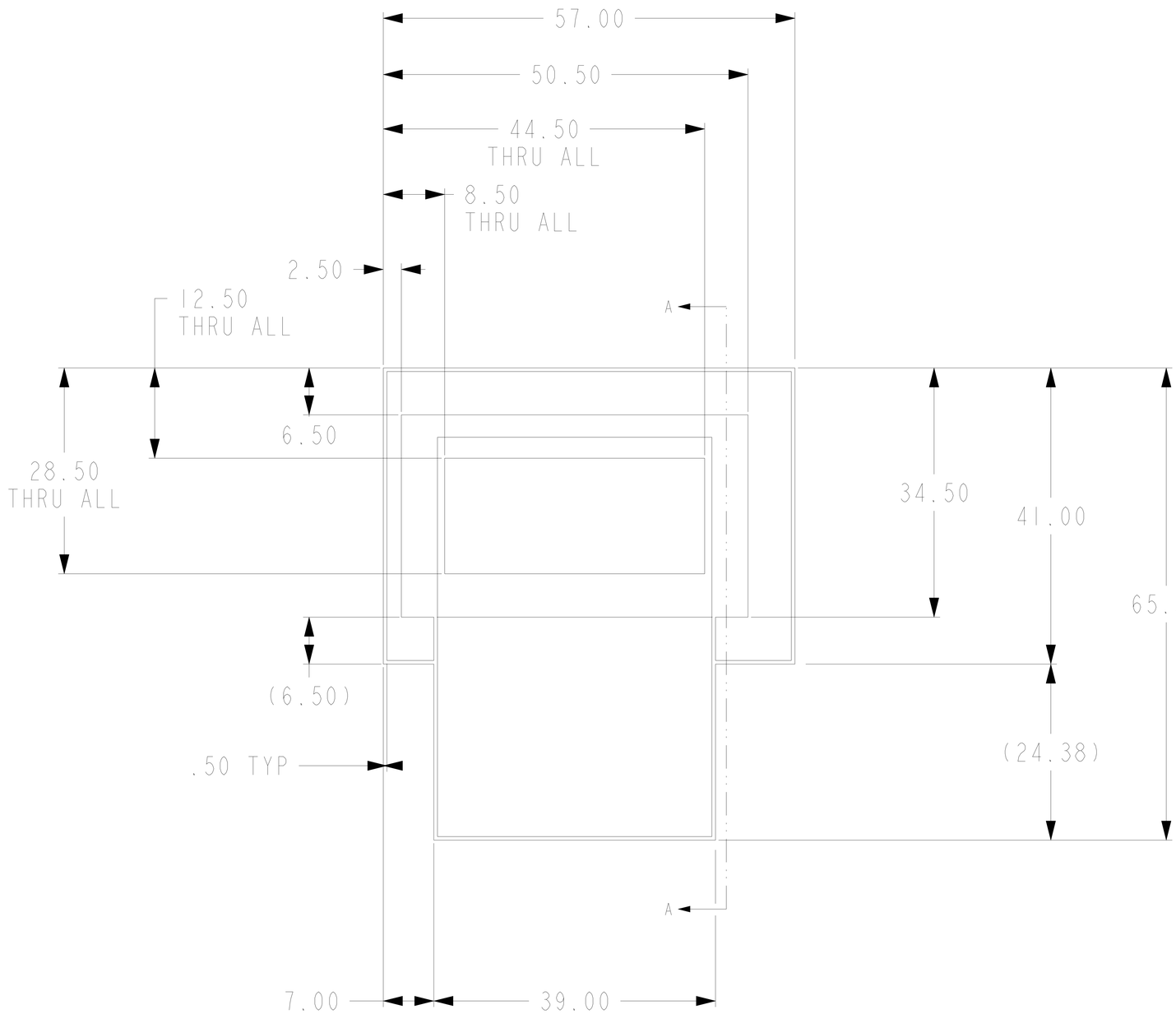

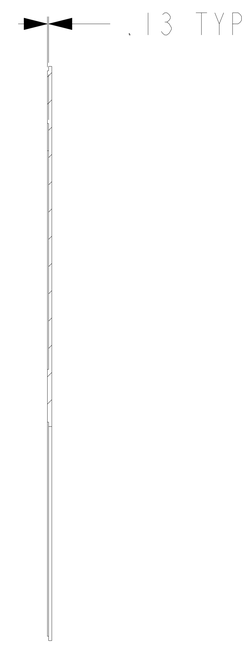

SECTION A-A

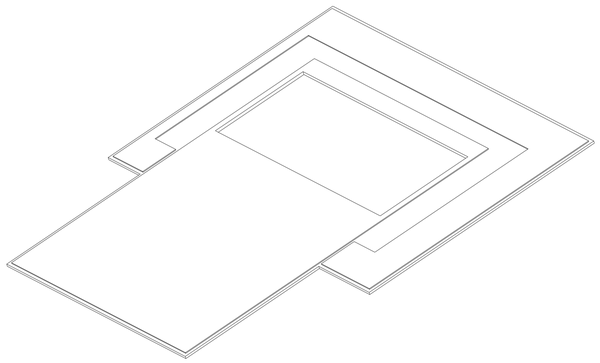

REFERENCE VIEW
SCALE 0.125

106090204-M8U-8510-A062-4

SIZE	DRAWING NUMBER	REV
E	106090204-M8U-8510-A062	0

SCALE	CAD MODEL	MODEL REV	SHEET
0.150	106090204-M8U-8510-A062-4	0	6 of 11

THIS DRAWING PREPARED ON Pro/ENGINEER

DWG NO: 106090204-M8U-8510-A062 | SH 6

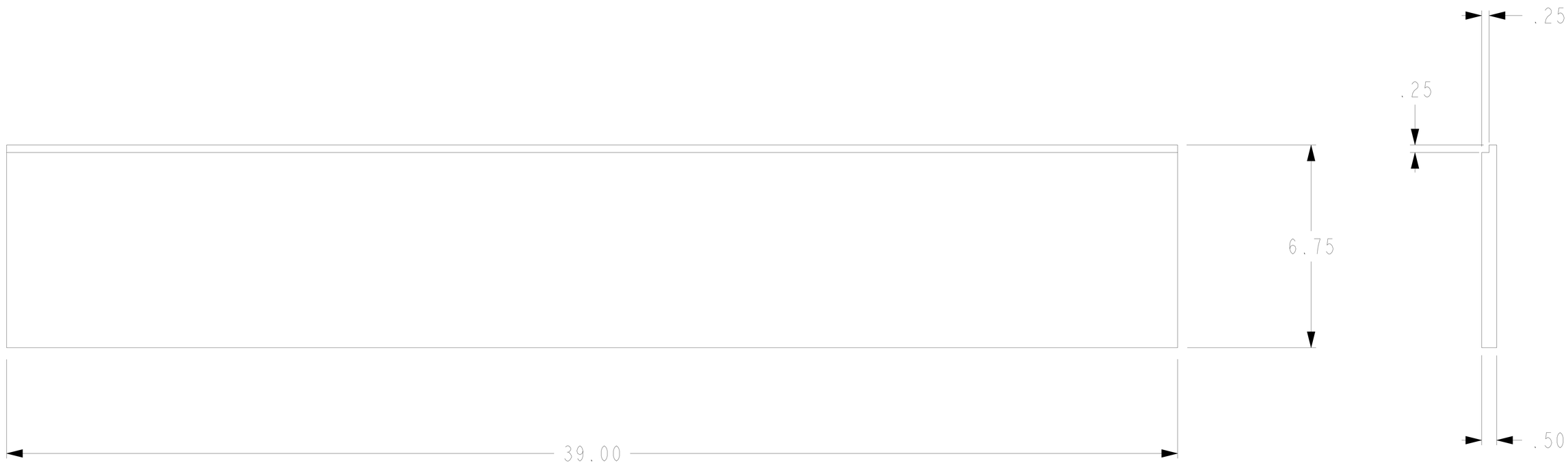

106090204-M8U-8510-A062-5

SIZE	DRAWING NUMBER	REV
E	106090204-M8U-8510-A062	0

SCALE	CAD MODEL	MODEL REV	SHEET
0.750	106090204-M8U-8510-A062-5	-	7 of 11

THIS DRAWING PREPARED ON Pro/ENGINEER

DWG NO. 106090204-M8U-8510-A062 SH 7

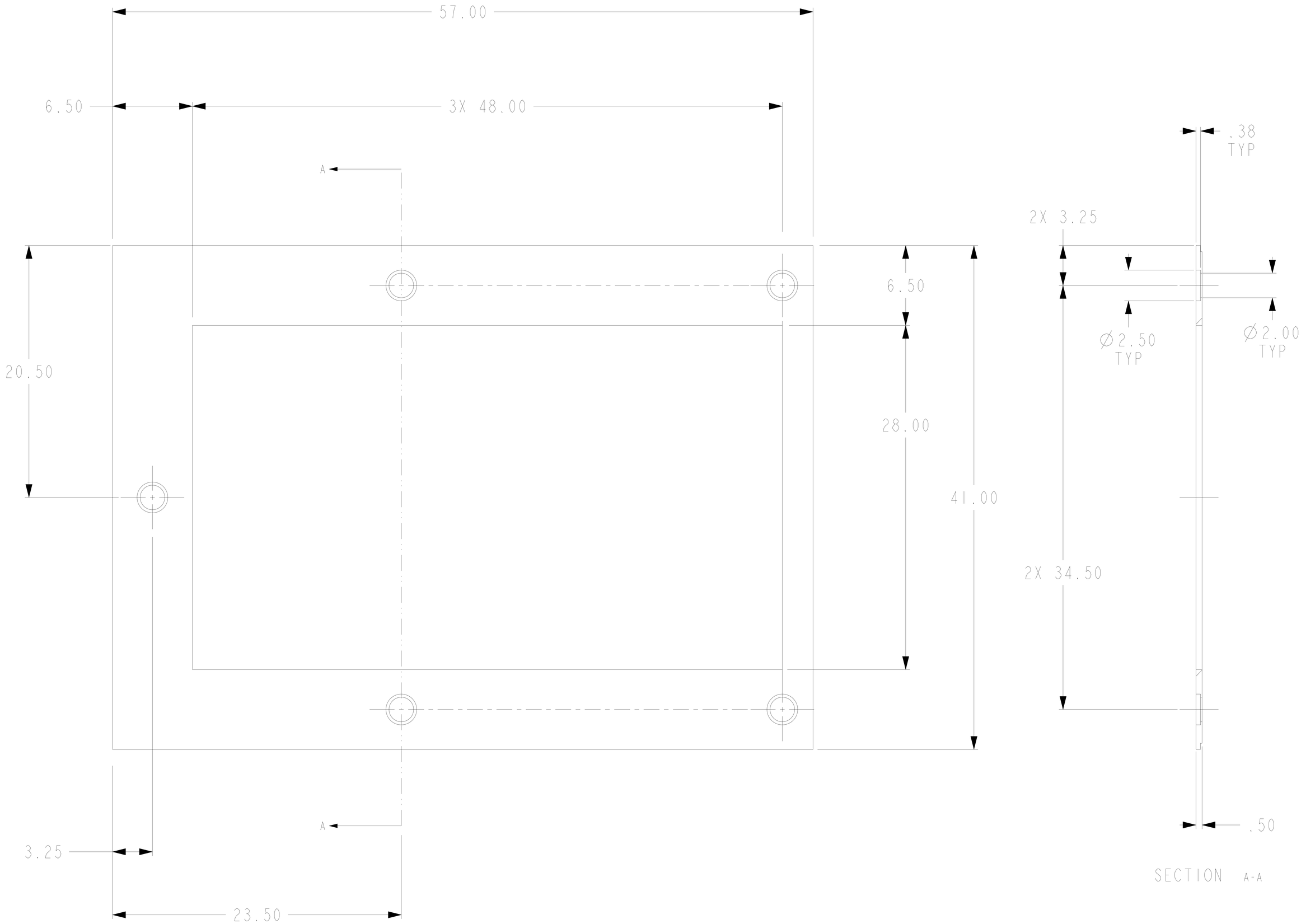

106090204-M8U-8510-A062-6

SIZE	DRAWING NUMBER	REV
E	106090204-M8U-8510-A062	0

SCALE	CAD MODEL	MODEL REV	SHEET
0.375	106090204-M8U-8510-A062-6	-	8 of 11

THIS DRAWING PREPARED ON Pro/ENGINEER

DWG NO. 106090204-M8U-8510-A062 | 8

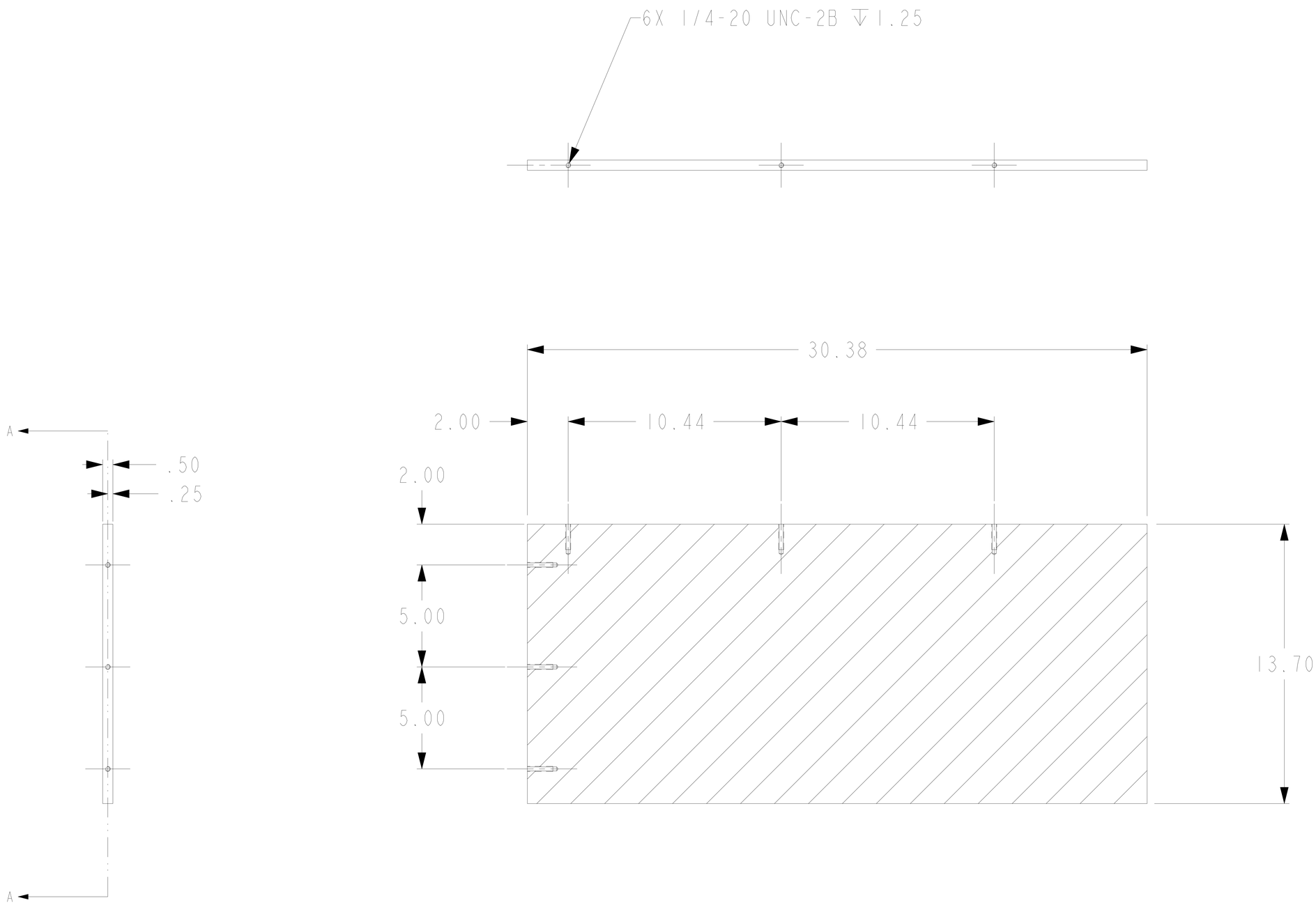

106090204-M8U-8510-A062-7

SIZE	DRAWING NUMBER	REV
E	106090204-M8U-8510-A062	0

SCALE	CAD MODEL	MODEL REV	SHEET
0.500	106090204-M8U-8510-A062-7	0	9 of 11

THIS DRAWING PREPARED ON Pro/ENGINEER

DWG NO. 106090204-M8U-8510-A062 | 9

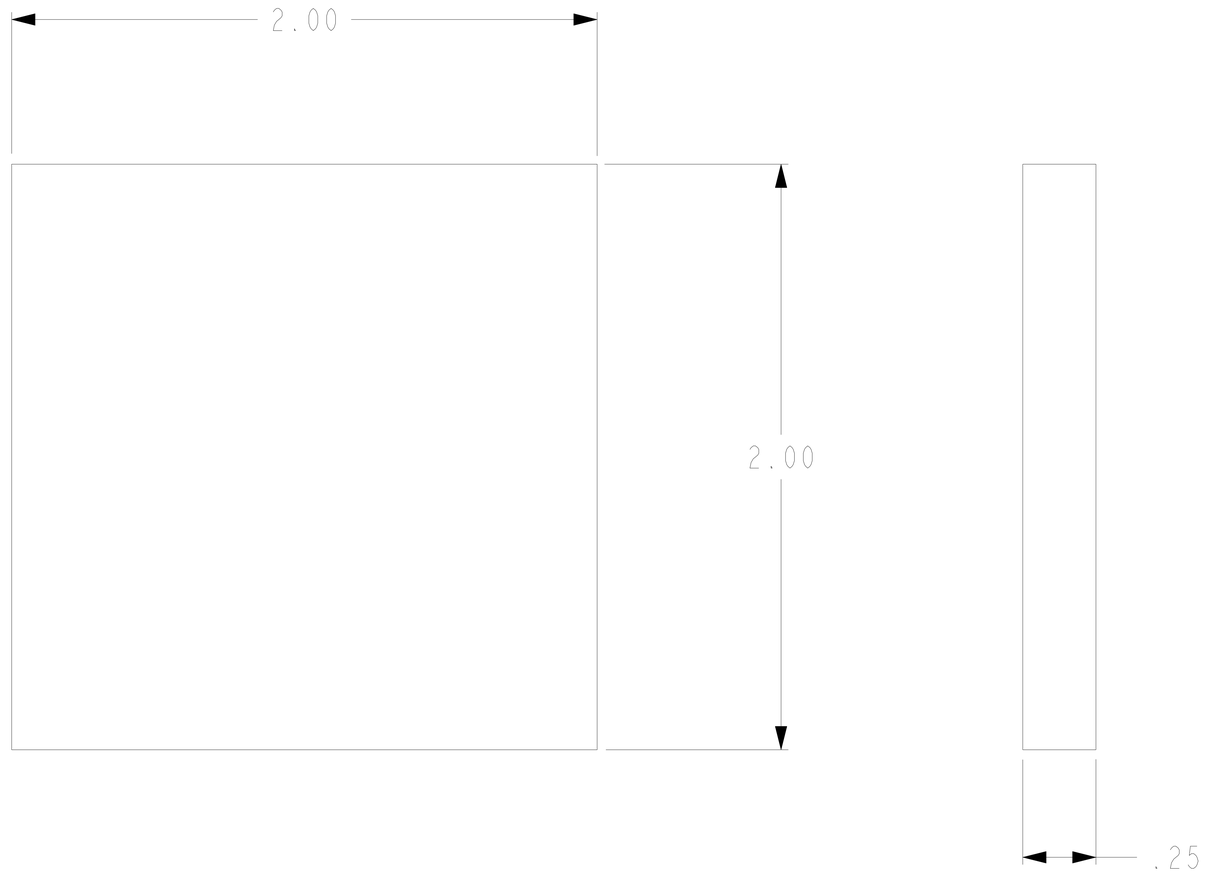

106090204-M8U-8510-A062-8

SIZE	DRAWING NUMBER	REV
E	106090204-M8U-8510-A062	0

SCALE	CAD MODEL	MODEL REV	SHEET
5.000	106090204-M8U-8510-A062-8	-	10 of 11

THIS DRAWING PREPARED ON Pro/ENGINEER

DWG NO: 106090204-M8U-8510-A062 SH 10

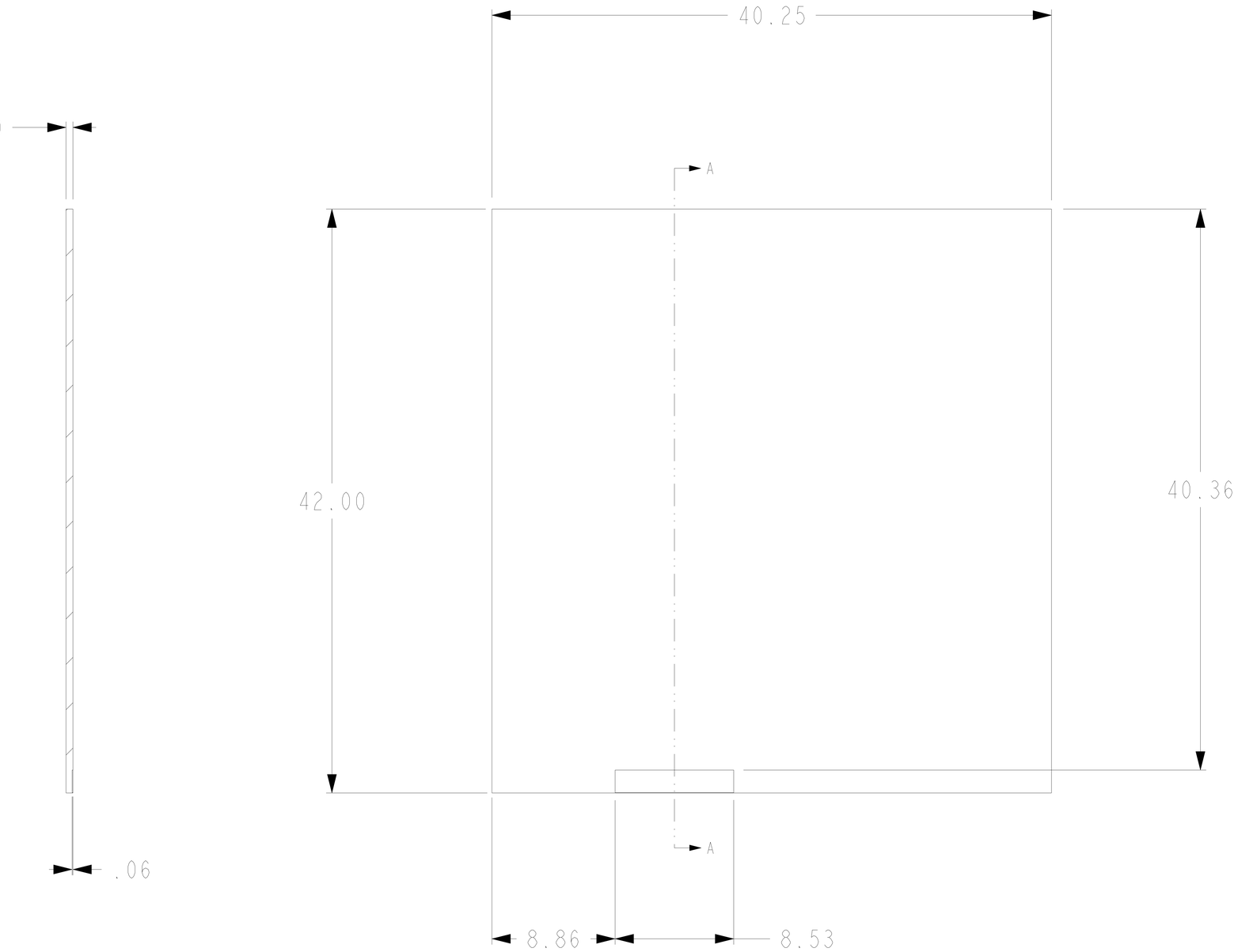

106090204-M8U-8510-A062-9

SIZE	DRAWING NUMBER	REV
E	106090204-M8U-8510-A062	0

SCALE	CAD MODEL	MODEL REV	SHEET
0.300	106090204-M8U-8510-A062-9	-	11 of 11

THIS DRAWING PREPARED ON Pro/ENGINEER

DWG NO. 106090204-M8U-8510-A062 SH 11