NO REPRESENTATION OR WARRANTY, EXPRESSED OR IMPLIED, IS MADE AS TO THE ACCURACY, COMPLETENESS OR USEFULNESS OF THE INFORMATION OR STATEMENTS CONTAINED IN THESE DRAWINGS, OR THAT THE DISCLOSURE OF ANY INFORMATION, APPARATUS, METHOD OR PROCESS DISCLOSED IN THESE DRAWINGS MAY NOT INFRINGE PRIVATE RIGHTS OF OTHERS. NO LIABILITY IS ASSUMED WITH RESPECT TO THE USE OF, OR FOR DAMAGES RESULTING FROM THE USE OF, ANY INFORMATION, APPARATUS, METHOD OR PROCESS DISCLOSED IN THESE DRAWINGS. DRAWINGS MADE AVAILABLE FOR INFORMATION TO BIDDER ARE NOT TO BE USED FOR OTHER PURPOSES AND ARE TO BE RETURNED UPON REQUEST OF THE FORWARDING CONTRACTOR.

REVISIONS

REV	TYPE	DESCRIPTION OF CHANGE	BY	CHK	APPR	DATE
A	-	ISSUED FOR COMMENT / APPROVAL	LED	WSK	WSK	05/15/10
0	-	ORIGINAL ISSUE (CFC)	LED			07/09/10

NOTES:

1. DIMENSIONS LOCATING TRUE POSITION ARE BASIC.

2 McMASTER - CARR SUPPLY CO.
6100 INDUSTRIAL BLVD.
ATLANTA, GA. 30336-2852
1-404-346-7000
WWW.MCMASTER.COM

3 CARR LANE MFG. CO.
4200 CARR LANE CT., P.O. BOX 191970
ST. LOUIS, MO. 63119-7970
1-314-647-6200
WWW.CARRLANE.COM

4 SPS TECHNOLOGIES
UNBRAKO ENGINEERED FASTENERS
4444 LEE ROAD
CLEVELAND, OH 44128-2902
1-216-581-3000
WWW.SPSTECH.COM

5 PARKER HANNIFIN CORP.
O-RING DIVISION
2360 PALUMBO DRIVE
LEXINGTON, KY 40509
1-859-335-5128
WWW.PARKER.COM/O-RING/

6 DEGAUSS THESE COMPONENTS TO A MAXIMUM LEVEL OF 2 GAUSS AS MEASURED WITH A HALL EFFECT PROBE .50 INCHES FROM THE SURFACE.

7 DETECTOR SHOWN FOR INTERFACE ONLY AND IS FURNISHED BY SNS. TOTAL NUMBER OF DETECTORS AND LOCATIONS WILL BE DETERMINED BY THE MANDI NEUTRON SCIENTIST. ALL BLANK SPACES TO BE SUPPLIED WITH A DAT BLANKING PLATE ASSY. (FIND NO. 10).

8 QUANTITY SHOWN IN PARTS LIST ON THESE ITEMS WILL BE DETERMINED BY THE NUMBER OF DETECTORS AND BLANKING PLATES REQUIRED.

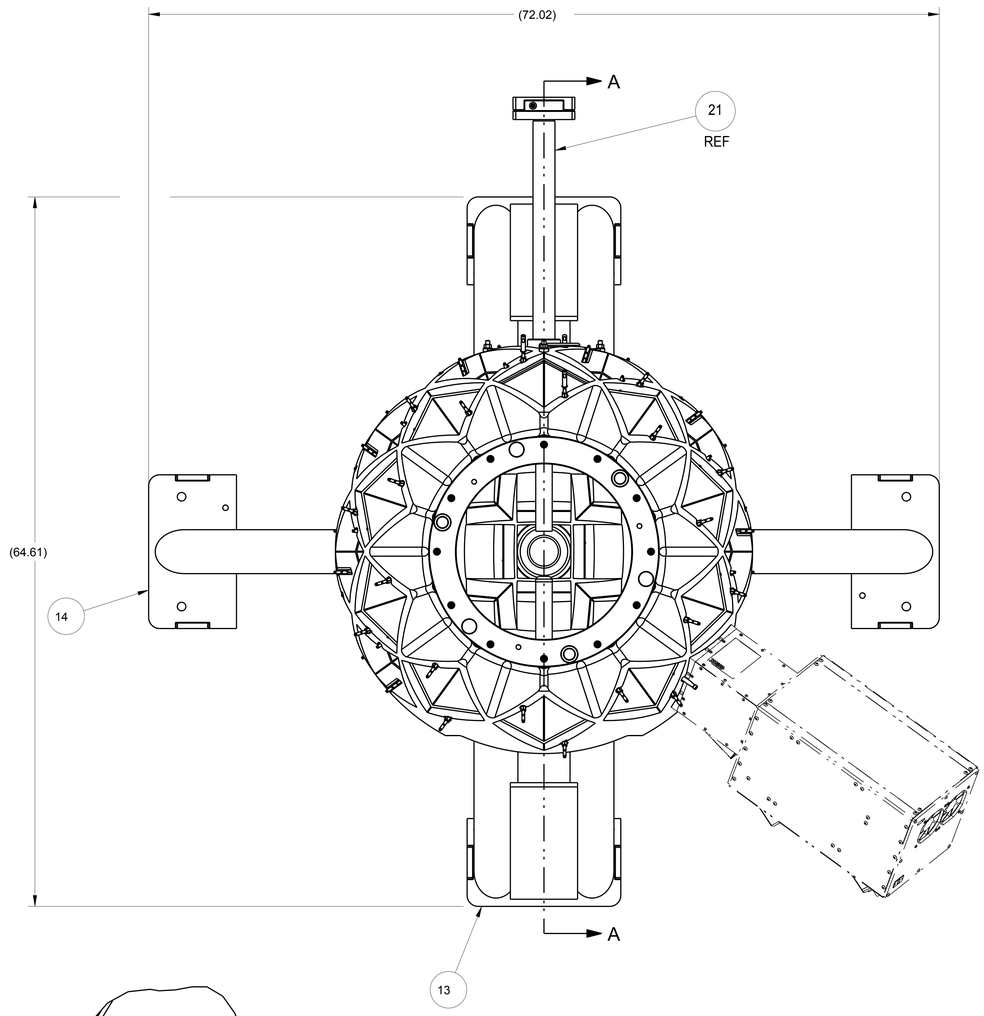

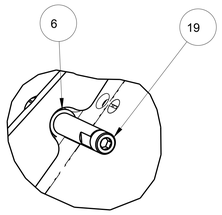

DETAIL A
SCALE 1/1

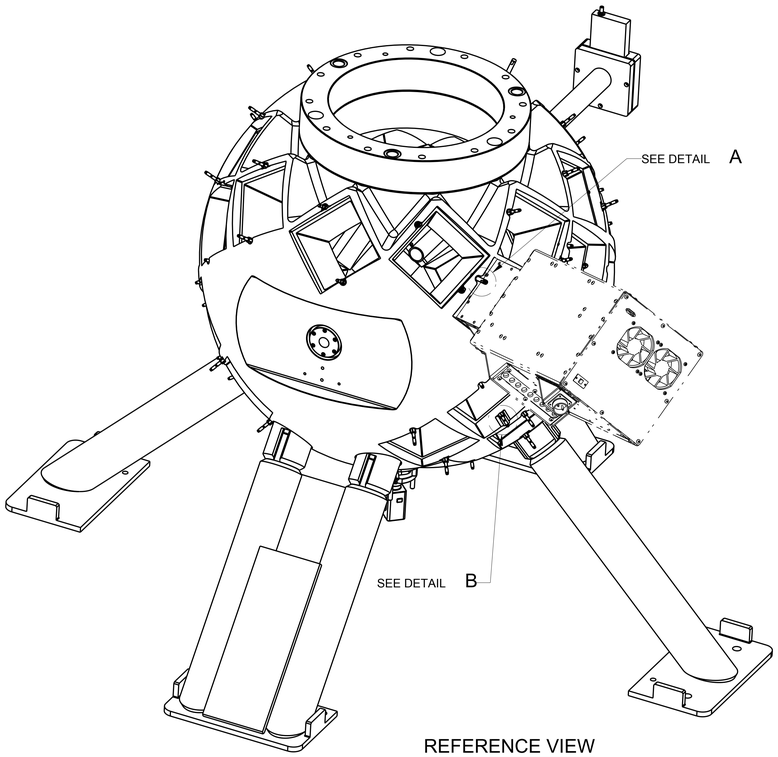

REFERENCE VIEW

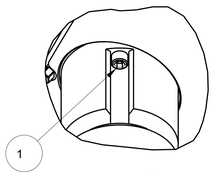

DETAIL E
SCALE 1/2

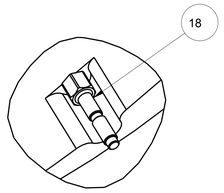

DETAIL B
SCALE 1/1

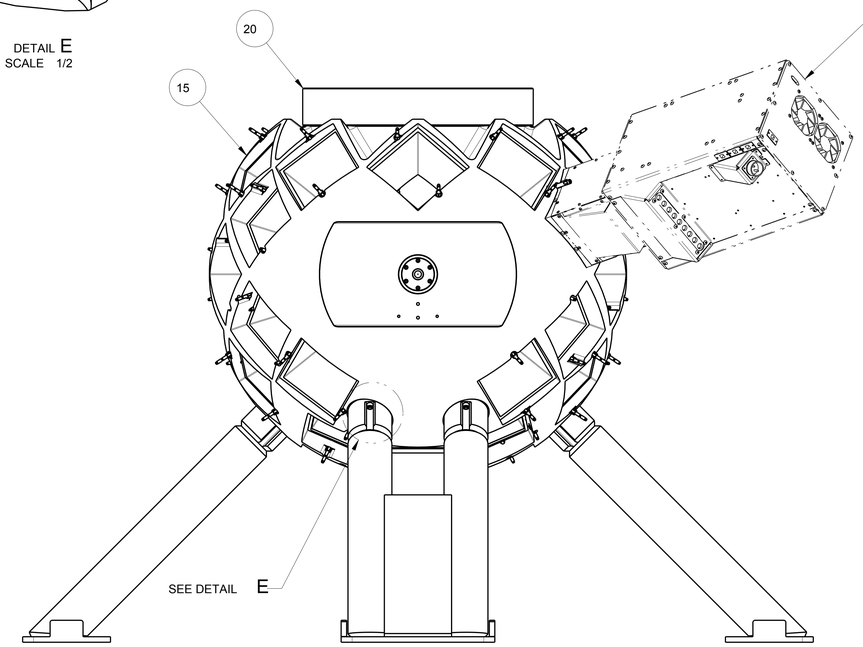

	FIND NO.	-01 QTY	CAGE CODE	PART OR IDENTIFYING NUMBER	DESCRIPTION OR NOMENCLATURE	MATERIAL / SPECIFICATION
	21	1		SING211B40M8U8711A100	DAF BEAM EXIT TUBE ASSEMBLY	--- ---
	20	1	--	SING211B40M8U8711A033	GANIOSTAT SPACER ASSY.	
8	19	8	--	SING211B40M8U8711A019	DETECTOR CAPTURE NUT	
	18	100		SING211B40M8U8711A018	COLLAR STUD - DETECTOR MOUNT	STAINLESS STEEL UNS S17400
7	17	12		SING211B40M8U8711A017	DETECTOR WINDOW SPACER	ALUMINUM UNS A96061-T651
7	16	2		SING1210M8U8712A005	DETECTOR ASSEMBLY	--- ---
	15	1		SING211B40M8U8711A015	DETECTOR ARRAY FRAME	ALUMINUM UNS A96061-T651
	14	2		SING211B40M8U8711A007	DAF SUPPORT LEG 2	STAINLESS STEEL UNS S30400
6	13	2		SING211B40M8U8711A006	DAF SUPPORT LEG 1	STAINLESS STEEL UNS S30400
6	12	1	--	SING211B20M8U8711A120	1MM X 1MM FIXED SLIT ASSY.	
	11	1		SING1240M8U8712A365	DAT MICROSCOPE CAMERA ASM	--- ---
7	10	1		SING1240M8U8712A362-01	DAT BLANKING PLATE ASSEMBLY	--- ---
5	9	1		O-RING_PARKER_2-386	O-RING PARKER 2-386	EPDM ASTM D1418
3	8	3		CLB-13000	BUSHING CLB-13000	CARBON STEEL AISI 1144
2 6 8	7	4	3A054	98023A031	3/8 WASHER .406 ID X .813 OD X .067 THK	ZN PLTD H-S STEEL ANSI B18.22.1
2 6 8	6	8		9713K62	BELLEVILLE DISC SPRING .255 X .500 X .022	STAINLESS STEEL UNS S31600
2 6 8	5	4	3A054	94895A031	HEX NUT, 3/8"-16, GRADE 8	STEEL, ZINC PLATED ASME B18.2.2
2 6	4	8		91025A632	DRIVER STUD .38-16UNC X 2 OAL	ALLOY STEEL COMMERCIAL GRADE
2|6	3	12		90128A636	SHCS, 3/8"-16 X 3.00, ZINC PLATE	GRADE 8, ZINC PLATE ASTM A574
2|6	2	6	OKVE6	90128A222	SHCS 10-24, 3/4" L	ALLOY STEEL ---
4|6	1	18		20097-6C-20	SHCS .38-16UNC-3A X 1.25 LONG	ALLOY STEEL ASTM A574

PARTS LIST

TOTAL WEIGHT 1219.964 LBS

DWG NO. SING211B40M8U8711A005 SHT 1

ADDITIONAL APPROVALS

NAME,TITLE	DATE
NAME,TITLE	DATE
NAME,TITLE	DATE
NAME,TITLE	DATE
NAME,TITLE	DATE
NAME,TITLE	DATE
NAME,TITLE	DATE
NAME,TITLE	DATE

SING211B00M8U8711A002	Max L. Gibson 2010.07.13 08:58:32 -04'00'
NEXT USED ASSEMBLIES	

QUALITY VERIFICATION

DOCUMENTS REQUIRED	APPLICABLE
MATERIAL MILL TEST REPORT	
LEAK TEST REPORT	
CLEANING CERT	X
WELD / BRAZE INSPECTION REPORT	
HEAT TREAT REPORT (W/CHART)	
DIMENSIONAL REPORT	X
MATERIAL SELLER CERT	X
FUNCTIONAL TEST REPORT	
DEVIATION REQUEST	X
NONCONFORMANCE REPORT	X

DIMENSIONS ARE IN INCHES.
DRAFTING STANDARD: ASME Y14.100
DIMENSIONING AND TOLERANCING IN ACCORDANCE WITH ASME Y14.5M,1994
DO NOT SCALE DRAWING

DEFAULT TOLERANCES
LINEAR ANGULAR
X.X ±0.1 ±0.5°
X.XX ±0.01
X.XXX ±0.005
REMOVE ALL BURRS AND BREAK SHARP EDGES: .010
SURFACE ROUGHNESS63 RMS MAX
THIRD ANGLE PROJECTION

APPROVALS

DESIGNER	L. E. DAVIS	DATE 07/09/10
DETAILER	L. E. DAVIS	DATE 07/09/10
CHECKER	Mark Overbay	DATE
ENGINEER		DATE
GRI		DATE
CHIEF ENGR		DATE
VERIFIER		DATE
VERIFIER		DATE
CONTROL SYSTEM 3	RELEASE WIP	
SNS PROCEDURE NFDD-ENG-001		

THIS DRAWING IS THE PROPERTY OF
OAK RIDGE NATIONAL LABORATORY
DEPARTMENT OF ENERGY UNDER U.S. GOVERNMENT CONTRACT DE-AC05-00OR22725
OAK RIDGE, TENNESSEE

SPALLATIONEUTRONSOURCE

SING 2 BEAMLINE 11-B (MANDI)
SAMPLE ENVIRONMENT
DAF STRUCTURAL ASSY. - 51 POSITIONS

SIZE	DRAWING NUMBER	REV
E	SING211B40M8U8711A005	0

SCALE	CAD MODEL	SHEET
3/16	SING211B40M8U8711A005	1 of 3

THIS DRAWING PREPARED ON Pro/ENGINEER

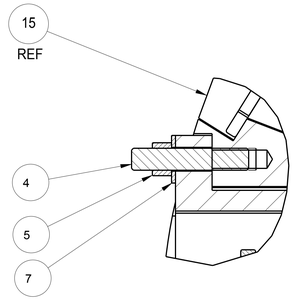

DETAIL C
SCALE 1/1

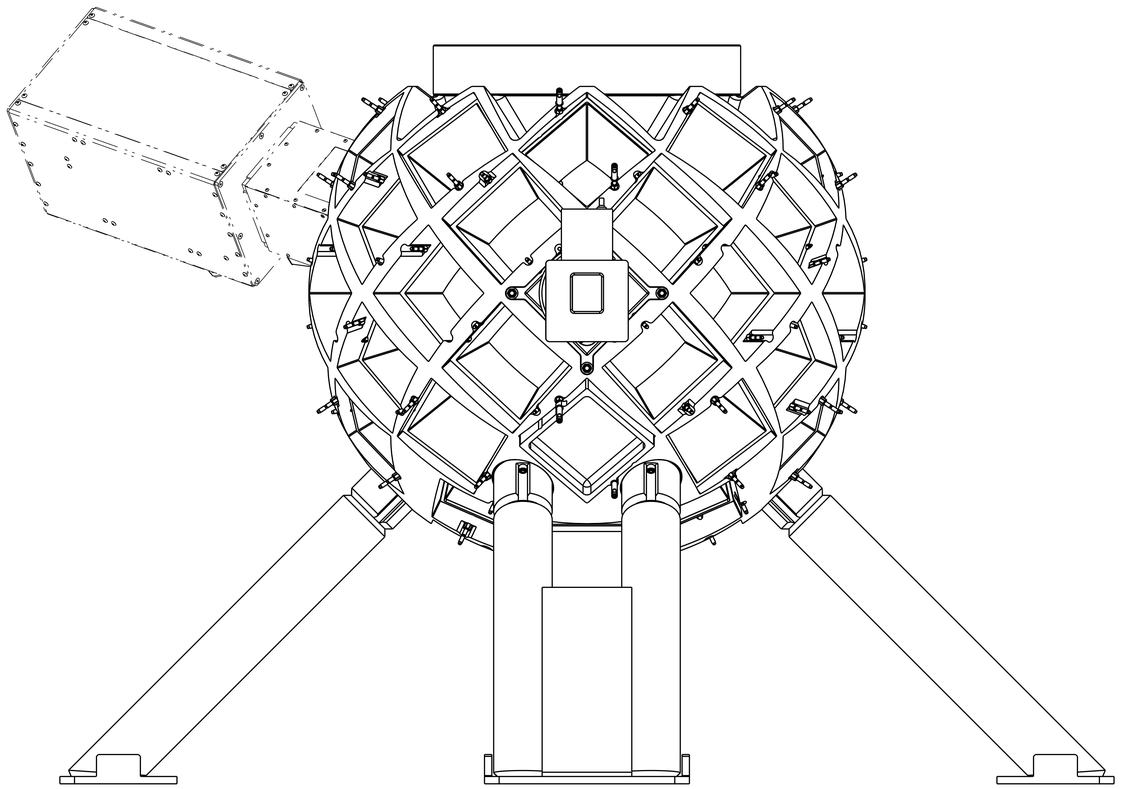

DETECTOR ARRAY FRAME LOOKING UPSTREAM

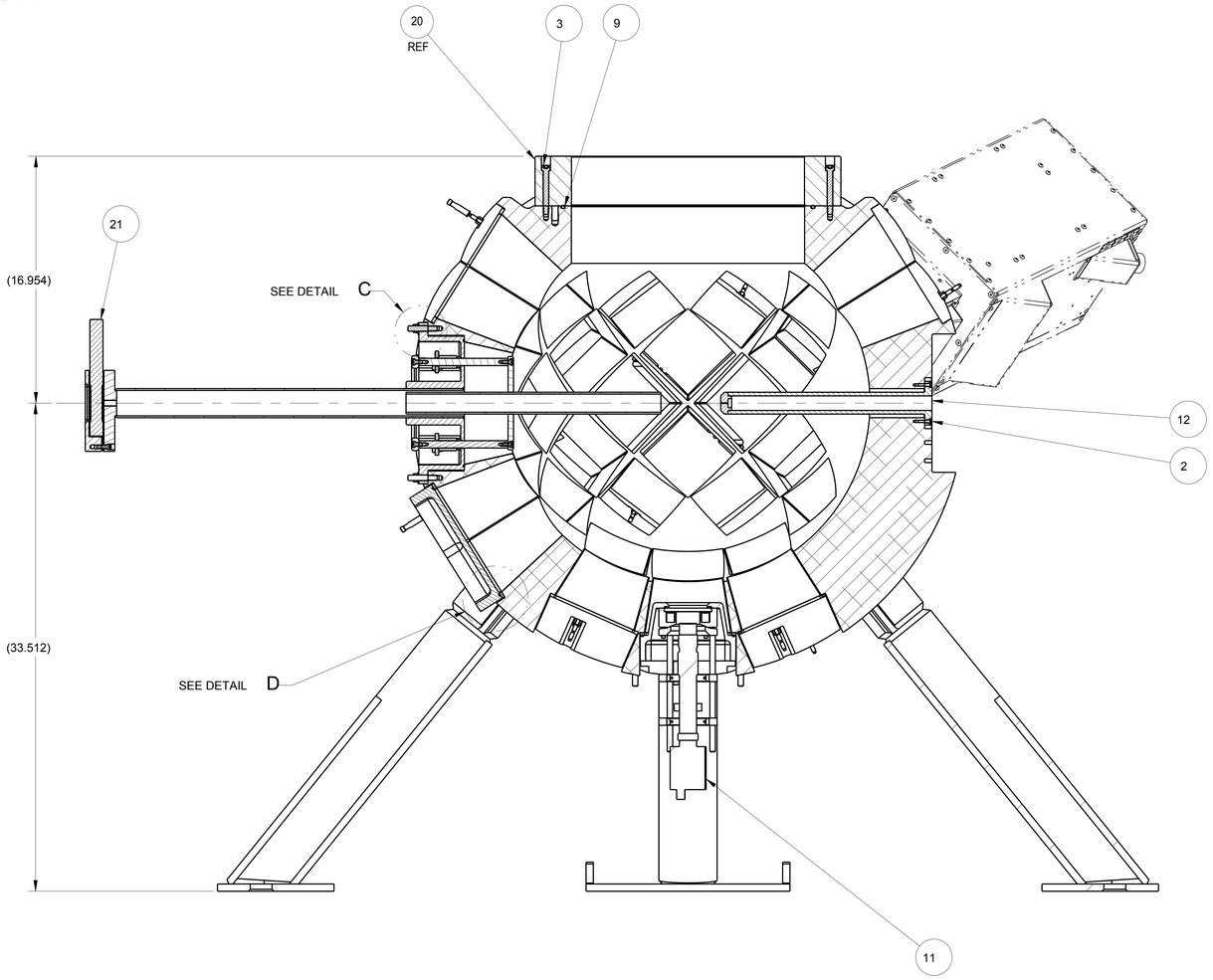

SECTION A-A

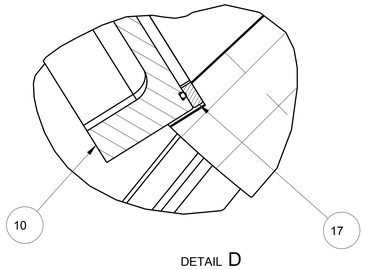

DETAIL D
SCALE 1/1

TYP AT ALL BLANKING PLATE LOCATIONS

SIZE	DRAWING NUMBER	REV
E	SING211B40M8U8711A005	0
SCALE 1/4	CAD MODEL SING211B40M8U8711A005	SHEET 2 of 3

THIS DRAWING PREPARED ON Pro/ENGINEER

DWG NO. SING211B40M8U8711A005 SH 2

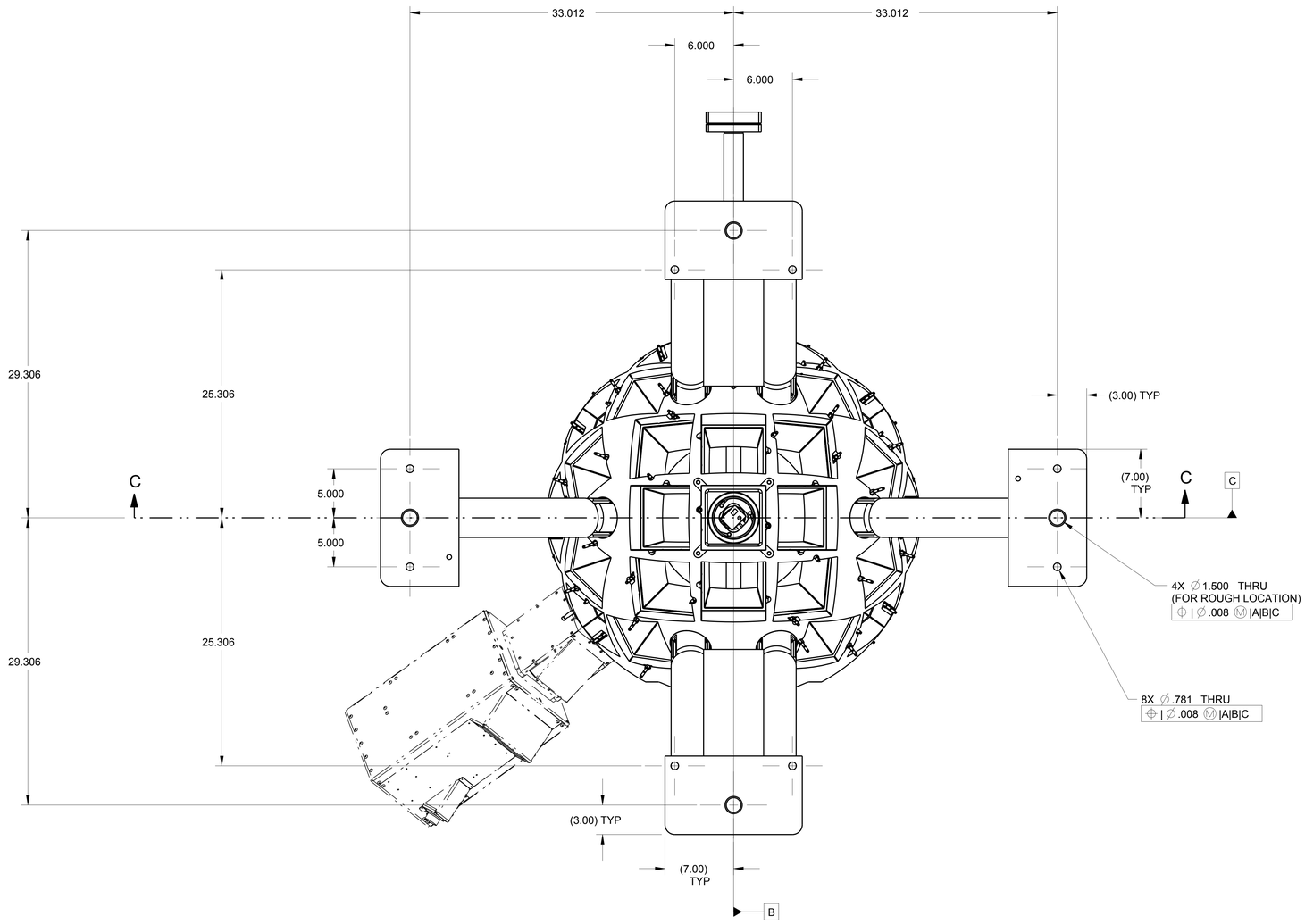

BOTTOM VIEW

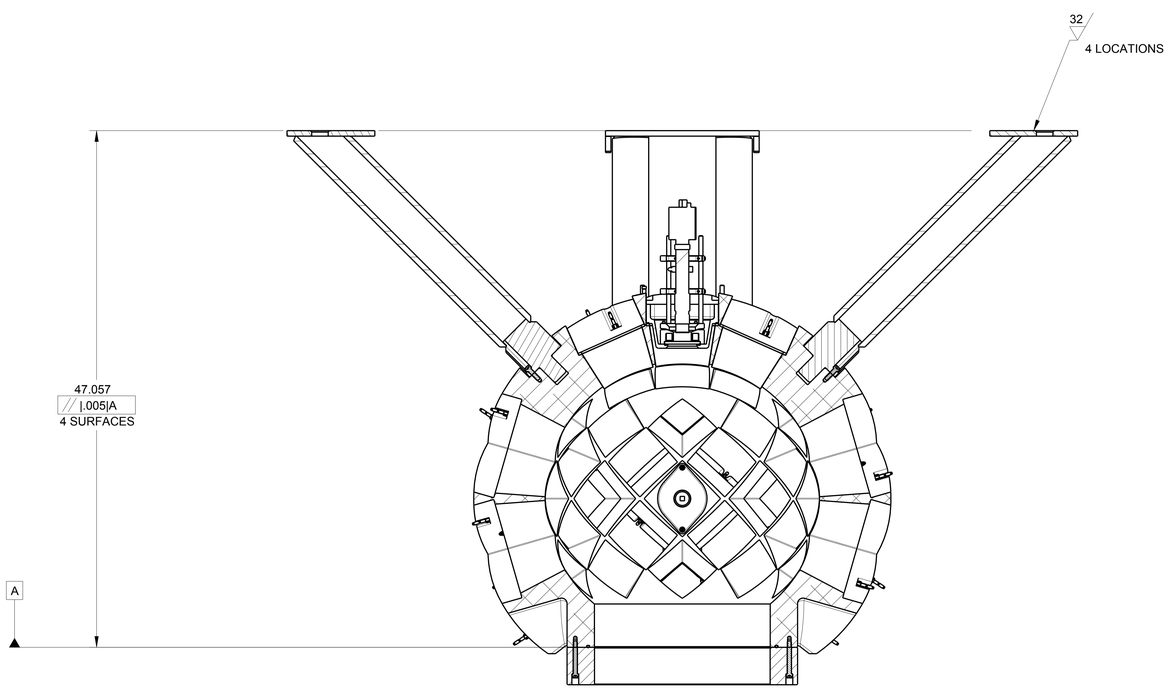

SECTION C-C

SIZE	DRAWING NUMBER	REV
E	SING211B40M8U8711A005	0
SCALE 3/16	CAD MODEL SING211B40M8U8711A005	SHEET 3 of 3

THIS DRAWING PREPARED ON Pro/ENGINEER

DWG NO. SING211B40M8U8711A005 | 3